CITY OF STEVENS POINT, WISCONSIN

DOWNTOWN SQUARE REDEVELOPMENT PROJECT

PROJECT #10.020

PROJECT MANAGER

LANDSCAPE ARCHITECT / ENGINEER (LA/E)
RETTLER CORPORATION
3317 BUSINESS PARK DRIVE
STEVENS POINT, WISCONSIN 54481
PHONE: 715-341-2633
FAX: 715-341-0431

PROJECT CONSULTANTS

ELECTRICAL ENGINEER
PIEPER ELECTRIC, INC.
5070 NORTH 35TH STREET
MILWAUKEE, WI 53209
PHONE: 414-831-1248
FAX: 414-462-6667

FOUNTAIN DESIGN
FOUNTAIN PEOPLE, INC.
PO BOX 807
SAN MARCOS, TX 78667
PHONE: 512-392-1155

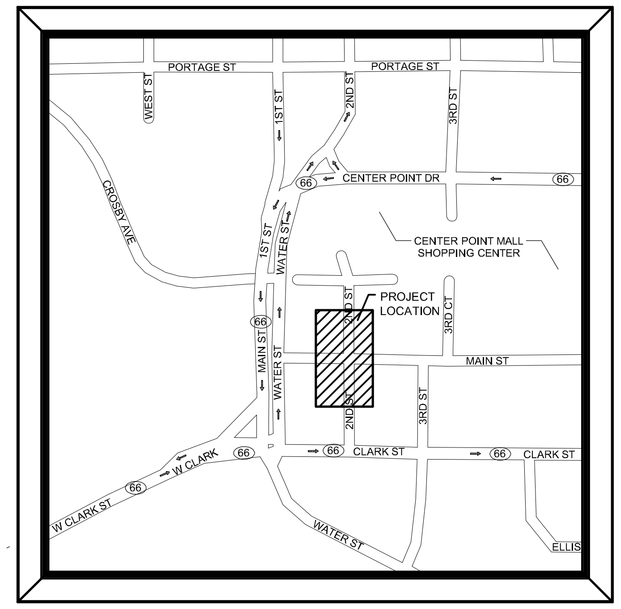

LOCATION MAP
STEVENS POINT, WISCONSIN
NO SCALE

N

SHEET INDEX

C1.0 TITLE SHEET

CIVIL ENGINEER / LANDSCAPE ARCHITECT
C2.0 EXISTING SITE PLAN
C3.0 SITE DEMOLITION PLAN - PHASE 1
C3.1 SITE DEMOLITION PLAN - PHASE 2
C4.0 TRAFFIC CONTROL PLAN
C5.0 SITE LAYOUT PLAN - PHASE 1
C5.1 SITE LAYOUT PLAN - PHASE 2
C6.0 SITE GRADING AND EROSION CONTROL PLAN
C7.0 SITE STORM SEWER PLAN
C8.0 SITE IRRIGATION PLAN
C9.0 SITE FOUNTAIN LAYOUT PLAN
C10.0 SITE LANDSCAPE PLAN
C11.0 SITE DETAILS
C11.1 SITE DETAILS
C11.2 SITE DETAILS
C11.3 SITE DETAILS
C11.4 FOUNTAIN DETAILS
C11.5 FOUNTAIN DETAILS

ELECTRICAL
E0 COVER PAGE
E0.1 ELECTRICAL DEMOLITION PLAN - PHASE 1
E0.2 ELECTRICAL DEMOLITION PLAN - PHASE 2
E1 ELECTRICAL LAYOUT - PHASE 1
E2 ELECTRICAL LAYOUT - PHASE 2
E3 ELECTRICAL DETAILS
E4 ELECTRICAL DETAILS
E5 ELECTRICAL DETAILS

RETTLER CORPORATION, INC. HOLDS THE RIGHTS TO COPYRIGHT IN AND TO THESE PRINTS, DRAWINGS AND DOCUMENTS. NO REPRODUCTION, COPYING, ALTERATION, MODIFICATION, USAGE, INCORPORATION INTO OTHER DOCUMENTS OR ASSIGNMENT OF THE SAME MAY OCCUR WITHOUT THE PRIOR WRITTEN PERMISSION OF RETTLER CORPORATION, INC.

©2011 RETTLER CORPORATION, INC.

REV	DATE	ISSUED FOR
	2/18/11	BID

DRAWN: J. KNEER
CHECKED: J. KNEER
DOCUMENT NO. 10.020

RETTLER corporation
3317 Business Park Drive, Stevens Point, WI 54481
Telephone: 715 - 341 - 2633; Fax: 715 - 341 - 0431
email: info @ rettler.com, website: www.rettler.com

TITLE SHEET

CITY OF STEVENS POINT
MATHIAS MITCHELL PUBLIC SQUARE
STEVENS POINT, WISCONSIN

C1.0

GENERAL NOTES

SURVEYOR NOTE:
THE EXISTING TOPOGRAPHIC SURVEY FOR THIS PROJECT WAS PERFORMED BY THE ENGINEERING DEPARTMENT OF THE CITY OF STEVENS POINT. RETTLER CORPORATION DOES NOT ACCEPT RESPONSIBILITY FOR THE ACCURACY OF THE DATA DENOTED ON THE MAP OF THE EXISTING SURFACE AND UTILITY AMENITIES.

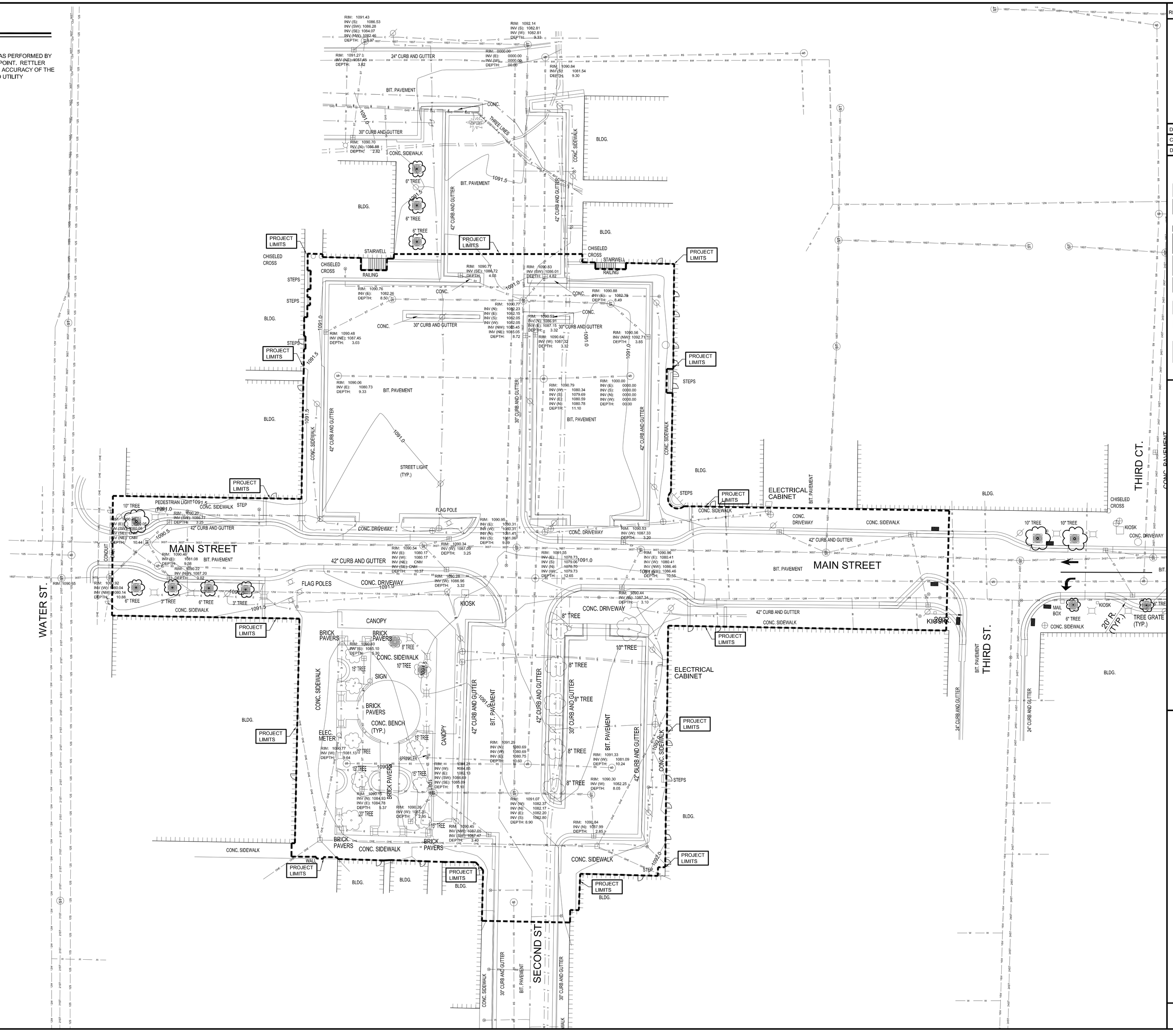

RETTLER CORPORATION, INC. HOLDS THE RIGHTS TO COPYRIGHT IN AND TO THESE PRINTS, DRAWINGS AND DOCUMENTS. NO REPRODUCTION, COPYING, ALTERATION, MODIFICATION, USAGE, INCORPORATION INTO OTHER DOCUMENTS OR ASSIGNMENT OF THE SAME MAY OCCUR WITHOUT THE PRIOR WRITTEN PERMISSION OF RETTLER CORPORATION, INC.
©2011 RETTLER CORPORATION, INC.

REV	DATE	ISSUED FOR
	2/18/11	BID

DRAWN:
CHECKED:
DOCUMENT NO. 10.020

RETTLER corporation
3317 Business Park Drive, Stevens Point, WI 54481
Telephone: 715-344-7500 Fax: 715-344-7553
email: info @ rettler.com web site: www.rettler.com

EXISTING SITE PLAN

CITY OF STEVENS POINT
MATHIAS MITCHELL PUBLIC SQUARE
STEVENS POINT, WISCONSIN

C2.0

SITE DEMOLITION KEY NOTES

- (A) CLEAR AND GRUB EXISTING VEGETATION / TREES
- (B) REMOVE AND DISPOSE OF LIGHT POLE AND FOUNDATION
- (C) INSTALL TEMPORARY 6' CHAIN LINK SECURITY FENCE
- (D) REMOVE AND DISPOSE OF EXISTING FEATURES
- (E) REMOVE EXISTING MATERIAL AND REPLACE WITH MIN. 8" OF DENSE GRADED BASE AND MATCH TO SURROUNDING GRADE
- (F) REMOVE STORM SEWER STRUCTURE AND PIPE
- (G) REMOVE AND SALVAGE EXISTING LIGHT POLE
- (H) REMOVE AND RELOCATE HYDRANT (BY OWNER) TO BE FIELD LOCATED — 6 C11.1 / 7 C11.1 / 8 C11.1 / 1 C11.2

SITE DEMOLITION LEGEND

SAWCUT EXISTING ASPHALT AND CONCRETE PAVEMENT	XXXXXXXXXXXX
ASPHALT PAVEMENT TO BE PULVERIZED SALVAGED, AND USED AS BASECOURSE IF APPLICABLE	
REMOVE EXISTING CONCRETE PAVEMENT AND HARD SURFACE	
REMOVE EXISTING CONCRETE CURB	
INSTALL TEMPORARY 6' CHAIN LINK SECURITY FENCE	

GENERAL NOTES

1. CONTACT DIGGER'S HOTLINE 5 WORKING DAYS PRIOR TO START OF DEMOLITION/CONSTRUCTION
2. LOCATE PRIVATE UTILITIES PRIOR TO THE START OF DEMOLITION/CONSTRUCTION
3. COORDINATE SITE CONSTRUCTION ACCESS WITH RETTLER CORPORATION PRIOR TO START OF CONSTRUCTION.
4. REMOVE ONLY THE EXISTING TREES AND VEGETATION, WITHIN THE PROJECT LIMITS THAT INHIBIT CONSTRUCTION.
5. REMOVE ANY ABANDONED UTILITIES WITHIN THE PROJECT LIMITS THAT INHIBIT CONSTRUCTION.
6. ALL CONTRACTORS PLANNING ON BIDDING THE PROJECT MUST VISIT THE SITE AND REVIEW THE EXISTING CONDITIONS PRIOR TO THE BID DATE. ANY DISCREPANCIES FOUND ARE TO BE BROUGHT TO THE ATTENTION OF THE PROJECT ARCHITECT FOR REVIEW IMMEDIATELY UPON DISCOVERY.
7. ALL REMOVED MATERIALS ARE TO BE TAKEN FROM SITE AND DISPOSED OF IN A LEGAL MANNER, EXCEPT FOR THOSE ITEMS NOTED TO BE SALVAGED. VERIFY ALL REMOVAL ITEMS WITH OWNER.
8. ALL SITE ENTITIES OUTSIDE THE PROJECT LIMIT LINE SHALL NOT BE DISTURBED.
9. ALL RIM ELEVATIONS FOR ALL UTILITY STRUCTURES SHALL BE ADJUSTED BY CONTRACTOR TO MATCH FINISH GRADE.
10. ALL EXISTING ROOF DRAINS SHALL BE DIRECTED TO THE NEAREST STORM STRUCTURE.

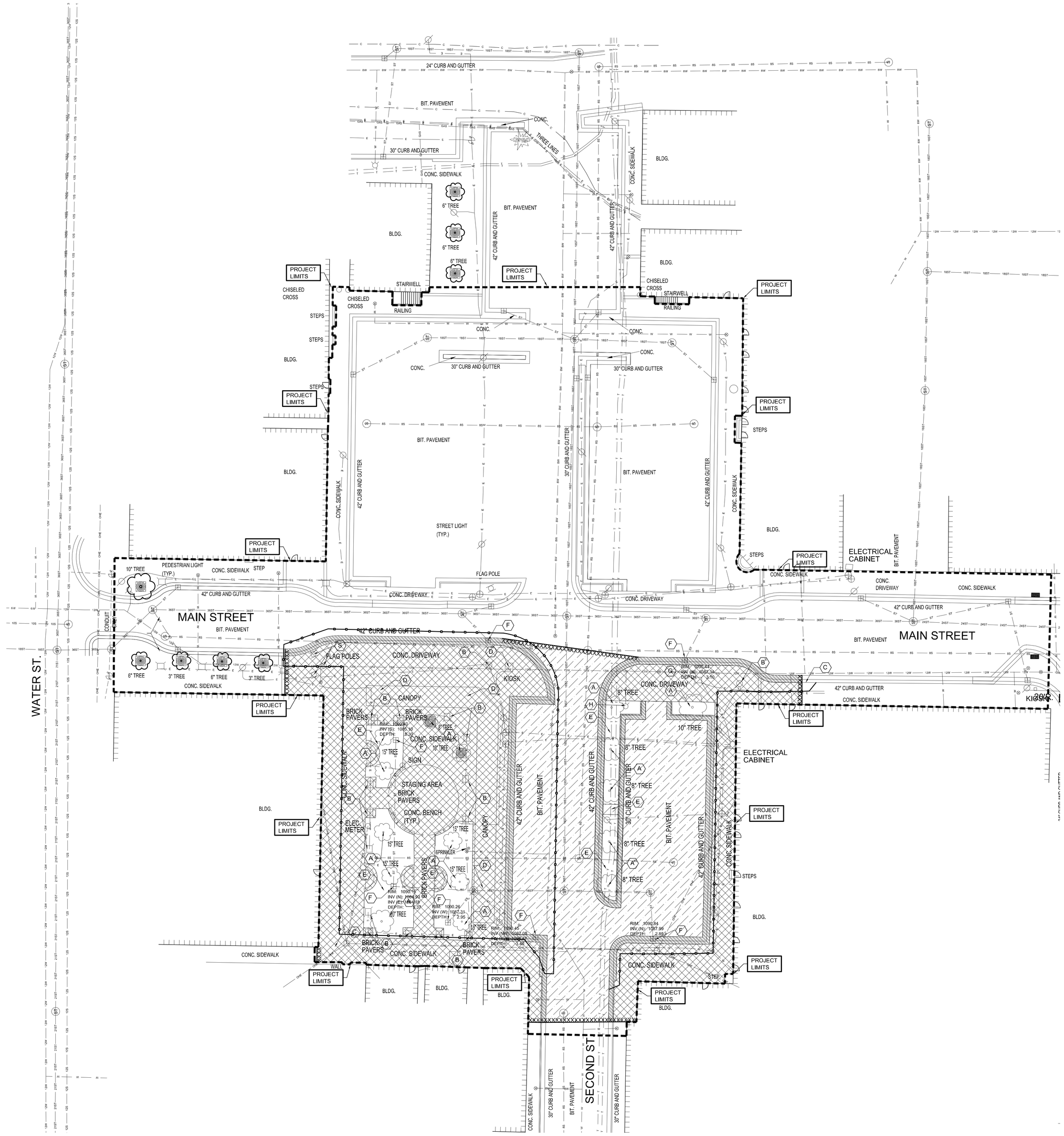

N

0' 20' 40' 60'

RETTLER CORPORATION, INC. HOLDS THE RIGHTS TO COPYRIGHT IN AND TO THESE PRINTS, DRAWINGS AND DOCUMENTS. NO REPRODUCTION, COPYING, ALTERATION, MODIFICATION, USAGE, INCORPORATION INTO OTHER DOCUMENTS OR ASSIGNMENT OF THE SAME MAY OCCUR WITHOUT THE PRIOR WRITTEN PERMISSION OF RETTLER CORPORATION, INC.

©2011 RETTLER CORPORATION, INC.

REV	DATE	ISSUED FOR
	2/18/11	BID

DRAWN: M. HELMRICK
CHECKED: J. KNEER
DOCUMENT NO. 10.020

RETTLER corporation
5317 Business Park Drive, Stevens Point, WI 54481
Tel: 715.344.7500 Fax: 715.344.7501
email: info @ rettler.com web site: www.rettler.com

SITE DEMOLITION PLAN - PHASE 1

CITY OF STEVENS POINT
MATHIAS MITCHELL PUBLIC SQUARE
STEVENS POINT, WISCONSIN

C3.0

SITE DEMOLITION KEY NOTES

- (A) CLEAR AND GRUB EXISTING VEGETATION / TREES
- (B) REMOVE AND DISPOSE OF LIGHT POLE AND FOUNDATION
- (C) INSTALL TEMPORARY 6' CHAIN LINK SECURITY FENCE
- (D) REMOVE AND DISPOSE OF EXISTING FEATURES
- (E) REMOVE EXISTING MATERIAL AND REPLACE WITH MIN. 8" OF DENSE GRADED BASE AND MATCH TO SURROUNDING GRADE
- (F) REMOVE STORM SEWER STRUCTURE AND PIPE
- (G) REMOVE AND SALVAGE EXISTING LIGHT POLE
- (H) MAINTAIN EXISTING STORM SEWER STRUCTURE

SITE DEMOLITION LEGEND

SAWCUT EXISTING ASPHALT AND CONCRETE PAVEMENT	XXXXXXXXXXXXX
ASPHALT PAVEMENT TO BE PULVERIZED SALVAGED, AND USED AS BASECOURSE IF APPLICABLE	
REMOVE EXISTING CONCRETE PAVEMENT AND HARD SURFACE	
REMOVE EXISTING CONCRETE CURB	
INSTALL TEMPORARY 6' CHAIN LINK SECURITY FENCE	

GENERAL NOTES

1. CONTACT DIGGER'S HOTLINE 5 WORKING DAYS PRIOR TO START OF DEMOLITION/CONSTRUCTION
2. LOCATE PRIVATE UTILITIES PRIOR TO THE START OF DEMOLITION/CONSTRUCTION
3. COORDINATE SITE CONSTRUCTION ACCESS WITH RETTLER CORPORATION PRIOR TO START OF CONSTRUCTION.
4. REMOVE ONLY THE EXISTING TREES AND VEGETATION, WITHIN THE PROJECT LIMITS THAT INHIBIT CONSTRUCTION.
5. REMOVE ANY ABANDONED UTILITIES WITHIN THE PROJECT LIMITS THAT INHIBIT CONSTRUCTION.
6. ALL CONTRACTORS PLANNING ON BIDDING THE PROJECT MUST VISIT THE SITE AND REVIEW THE EXISTING CONDITIONS PRIOR TO THE BID DATE. ANY DISCREPANCIES FOUND ARE TO BE BROUGHT TO THE ATTENTION OF THE PROJECT ARCHITECT FOR REVIEW IMMEDIATELY UPON DISCOVERY.
7. ALL REMOVED MATERIALS ARE TO BE TAKEN FROM SITE AND DISPOSED OF IN A LEGAL MANNER, EXCEPT FOR THOSE ITEMS NOTED TO BE SALVAGED. VERIFY ALL REMOVAL ITEMS WITH OWNER.
8. ALL SITE ENTITIES OUTSIDE THE PROJECT LIMIT LINE SHALL NOT BE DISTURBED.
9. ALL RIM ELEVATIONS FOR ALL UTILITY STRUCTURES SHALL BE ADJUSTED BY CONTRACTOR TO MATCH FINISH GRADE.
10. ALL EXISTING ROOF DRAINS SHALL BE DIRECTED TO THE NEAREST STORM STRUCTURE.

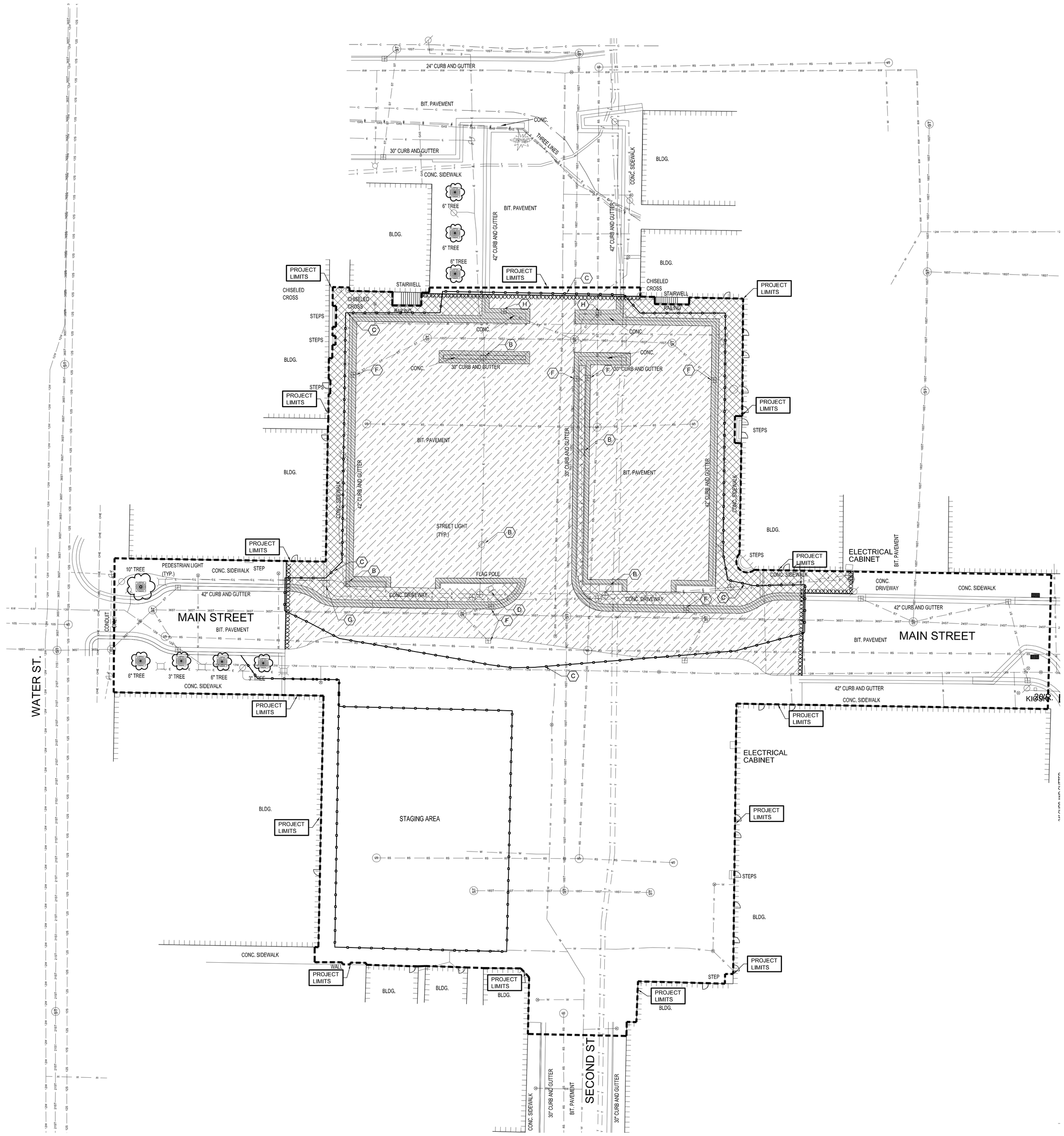

N

0' 20' 40' 60'

RETTLER CORPORATION, INC. HOLDS THE RIGHTS TO COPYRIGHT IN AND TO THESE PRINTS, DRAWINGS AND DOCUMENTS. NO REPRODUCTION, COPYING, ALTERATION, MODIFICATION, USAGE, INCORPORATION INTO OTHER DOCUMENTS OR ASSIGNMENT OF THE SAME MAY OCCUR WITHOUT THE PRIOR WRITTEN PERMISSION OF RETTLER CORPORATION, INC.

©2011 RETTLER CORPORATION, INC.

REV	DATE	ISSUED FOR
	2/18/11	BID

DRAWN: M. HELMRICK
CHECKED: J. KNEER
DOCUMENT NO. 10.020

RETTLER corporation
5317 Business Park Drive, Stevens Point, WI 54481
Tel: 715.344.7500 Fax: 715.344.7501
email: info @ rettler.com web site: www.rettler.com

SITE DEMOLITION PLAN - PHASE 2

CITY OF STEVENS POINT
MATHIAS MITCHELL PUBLIC SQUARE
STEVENS POINT, WISCONSIN

C3.1

TRAFFIC CONTROL LEGEND

TRAFFIC CONTROL DRUMS WITH STEADY BURN TYPE "C" LIGHT (SUPPLIED BY OWNER)

SIGN ON TEMPORARY SUPPORT (SUPPLIED BY OWNER)

TRAFFIC DIRECTION ARROW (FOR REFERENCE ONLY)

TEMPORARY CONCRETE CURB STOP (SUPPLIED BY CONTRACTOR)

TEMPORARY 6' CHAIN LINK SECURITY FENCE (SUPPLIED BY CONTRACTOR)

GENERAL NOTES

1. CONTRACTOR TO OBTAIN A RIGHT OF WAY PERMIT FROM THE CITY OF STEVENS POINT PUBLIC WORKS DEPARTMENT BEFORE CONSTRUCTION ACTIVITY BEGINS. THIS PLAN SHALL BE SUBMITTED WITH THE PERMIT APPLICATION.
2. CONTRACTOR TO GIVE OWNER 2 DAY NOTICE FOR REQUESTING TRAFFIC CONTROL MATERIALS.

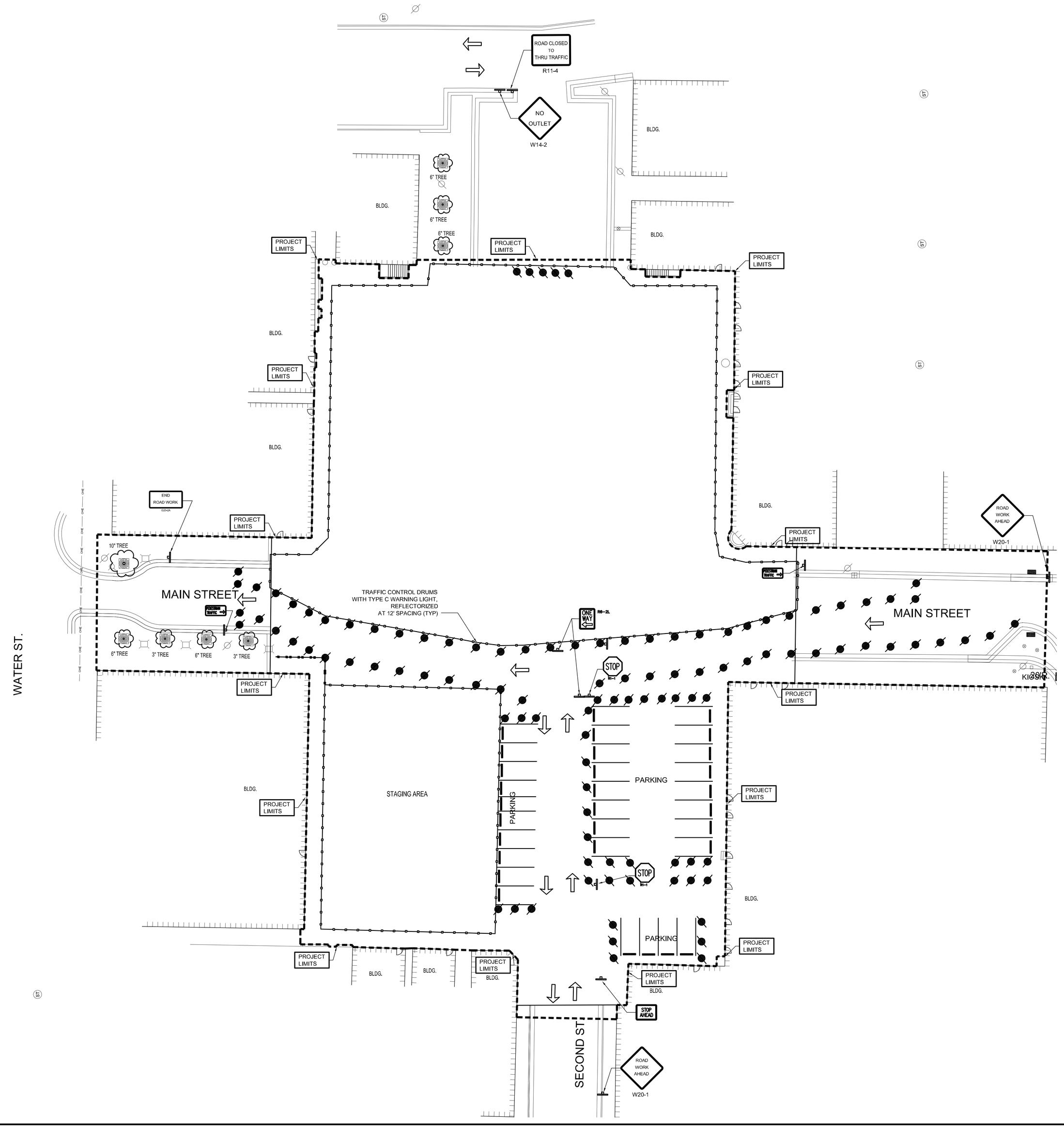

N

0' 20' 40' 60'

RETTLER CORPORATION, INC. HOLDS THE RIGHTS TO COPYRIGHT IN AND TO THESE PRINTS, DRAWINGS AND DOCUMENTS. NO REPRODUCTION, COPYING, ALTERATION, MODIFICATION, USAGE, INCORPORATION INTO OTHER DOCUMENTS OR ASSIGNMENT OF THE SAME MAY OCCUR WITHOUT THE PRIOR WRITTEN PERMISSION OF RETTLER CORPORATION, INC.

©2011 RETTLER CORPORATION, INC.

REV	DATE	ISSUED FOR
	2/18/11	BID

DRAWN: M. HELMRICK
CHECKED: J. KNEER
DOCUMENT NO. 10.020

RETTLER corporation
■ 7317 Business Park Drive, Stevens Point, WI 54481
Telephone: 715-345-0650 Fax: 715-345-0651
■ email: info @ rettler.com web site: www.rettler.com

TRAFFIC CONTROL PLAN

CITY OF STEVENS POINT
MATHIAS MITCHELL PUBLIC SQUARE
STEVENS POINT, WISCONSIN

C4.0

GENERAL NOTES

1. CONTACT DIGGERS HOTLINE 5 WORKING DAYS PRIOR TO THE START OF CONSTRUCTION.
2. ALL PROPOSED DIMENSIONS ARE REFERENCED PARALLEL OR PERPENDICULAR TO THE PROPOSED FEATURES SHOWN.
3. CURB DIMENSIONS ARE TO THE BACK OF CURB.
4. GRADE, LINE, AND LEVEL SHALL BE REVIEWED IN THE FIELD BY THE PROJECT MANAGER.
5. DO NOT DISTURB AREA OUTSIDE PROJECT LIMITS.
6. PLATING OF ALL UTILITY MANHOLES AND INLETS IS REQUIRED DURING ASPHALT PAVING.

SITE LEGEND

3.5" ASPHALT PAVEMENT 12" DENSE GRADED BASE, OR RECYCLED MATERIAL PAVING TO OCCUR IN PHASE 2 CONSTRUCTION	1 C11.0
6" CONCRETE 4" DENSE GRADED BASE (∅ BAG GOLD COLOR, ALTERNATE A1)	2 C11.0
BRICK PAVERS ON SAND SETTING BED 4" CONCRETE ON 4" DENSE GRADED BASE	12 C11.0
REMOVABLE BOLLARD AND BASE (INSTALLATION ONLY)	6 C11.0
REMOVABLE BOLLARD BASE ONLY (INSTALLATION ONLY)	
FIXED BASE BOLLARD (INSTALLATION ONLY)	5 C11.0

KEY NOTES

1A	30" CURB AND GUTTER	3 C11.0
1B	30" CURB AND GUTTER	
2	30" MOUNTABLE CURB	8 C11.0
3	24" FLOWLINE CURB	9 C11.0
4	PAVEMENT STRIPING	1 C11.1
5	DIRECTIONAL ARROWS	1 C11.1
6	TYPE 2 CURB RAMP	4 C11.0
7	TYPE 1-A CURB RAMP	4 C11.0
8	24" CONCRETE BAND	7 C11.0
9	TREE GRATE INSTALLATION ONLY	5 C11.3
10	PLANTER CURB	11 C11.0
11	16" ORNAMENTAL METAL FENCING	3 C11.3
12	8' ORNAMENTAL METAL FENCING	4 C11.3
13	8' x 8' ORNAMENTAL METAL GATE	6 C11.3
14	FOUNTAIN INSTALLATION	C11.4, C11.5
15	CURB TERMINUS	10 C11.0
16	4' X 4' TRANSFORMER PAD	
17	BRICK PIER	1 C11.3
18	SLATE COLORED CONCRETE BAND (ALTERNATE A2)	
19	STOP SIGN, ONE WAY (RIGHT ONLY) SIGN	
20	HANDICAP SIGN (FASTEN TO BOLLARD)	2 C11.1

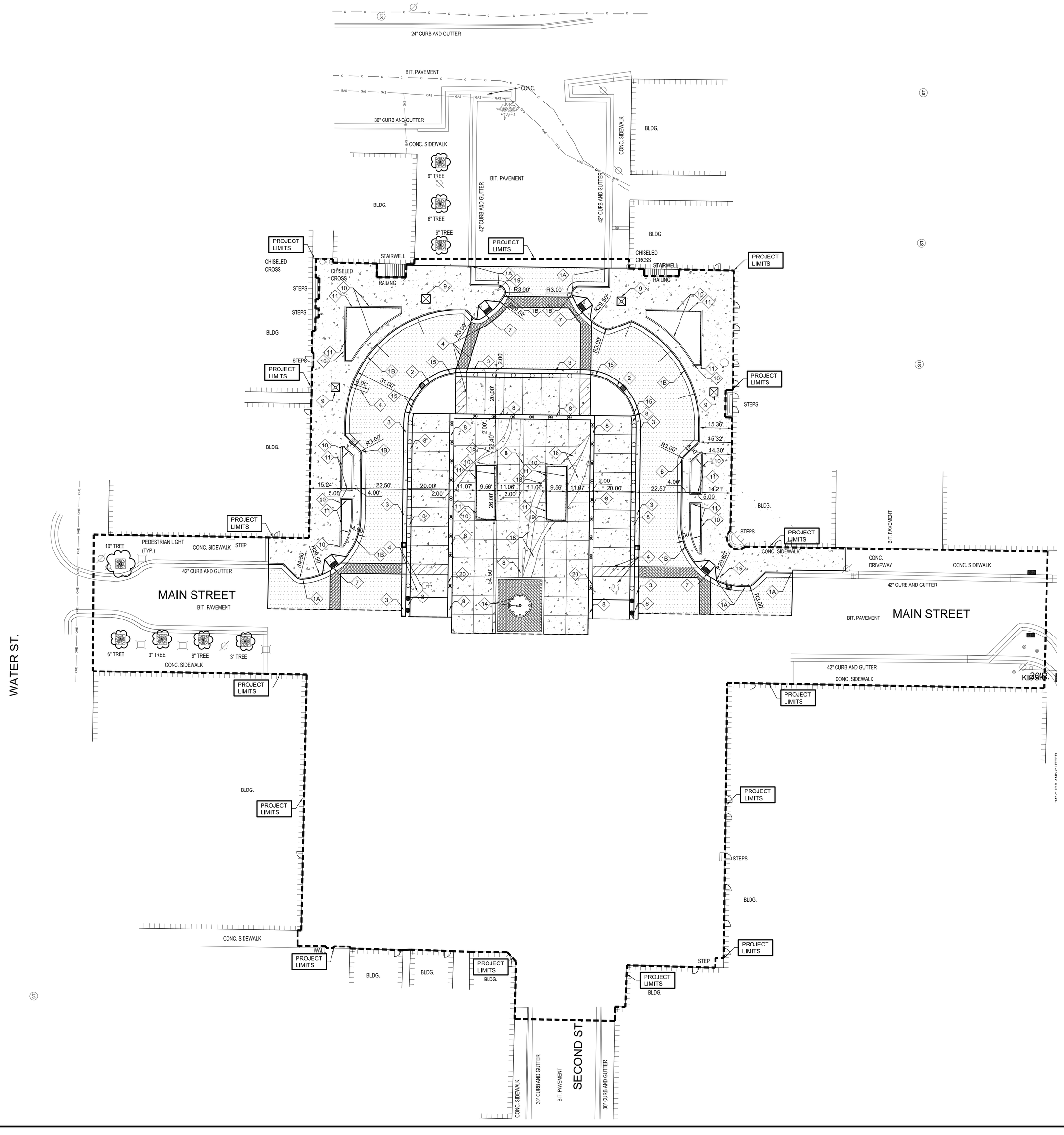

N

0' 20' 40' 60'

RETTLER CORPORATION, INC. HOLDS THE RIGHTS TO COPYRIGHT IN AND TO THESE PRINTS, DRAWINGS AND DOCUMENTS. NO REPRODUCTION, COPYING, ALTERATION, MODIFICATION, USAGE, INCORPORATION INTO OTHER DOCUMENTS OR ASSIGNMENT OF THE SAME MAY OCCUR WITHOUT THE PRIOR WRITTEN PERMISSION OF RETTLER CORPORATION, INC.
©2011 RETTLER CORPORATION, INC.

REV	DATE	ISSUED FOR
	2/18/11	BID

DRAWN: J. KNEER
CHECKED: J. KNEER
DOCUMENT NO. 10.020

RETTLER corporation
5317 Business Park Drive, Stevens Point, WI 54481
Phone: 715-344-7500 Fax: 715-344-8536
email: info @ rettler.com web site: www.rettler.com

SITE LAYOUT PLAN - PHASE 1

CITY OF STEVENS POINT
MATHIAS MITCHELL PUBLIC SQUARE
STEVENS POINT, WISCONSIN

C5.0

GENERAL NOTES

1. CONTACT DIGGERS HOTLINE 5 WORKING DAYS PRIOR TO THE START OF CONSTRUCTION.
2. ALL PROPOSED DIMENSIONS ARE REFERENCED PARALLEL OR PERPENDICULAR TO THE PROPOSED FEATURES SHOWN.
3. CURB DIMENSIONS ARE TO THE BACK OF CURB.
4. GRADE, LINE, AND LEVEL SHALL BE REVIEWED IN THE FIELD BY THE PROJECT MANAGER.
5. DO NOT DISTURB AREA OUTSIDE PROJECT LIMITS.
6. PLATING OF ALL UTILITY MANHOLES AND INLETS IS REQUIRED DURING ASPHALT PAVING.

SITE LEGEND

3.5" ASPHALT PAVEMENT 12" DENSE GRADED BASE, OR RECYCLED MATERIAL PAVING TO OCCUR IN PHASE 2 CONSTRUCTION	1 C11.0
6" CONCRETE 4" DENSE GRADED BASE (∅ BAG GOLD COLOR, ALTERNATE A1)	2 C11.0
BRICK PAVERS ON SAND SETTING BED 4" CONCRETE ON 4" DENSE GRADED BASE	12 C11.0
REMOVABLE BOLLARD AND BASE (INSTALLATION ONLY)	6 C11.0
REMOVABLE BOLLARD BASE ONLY (INSTALLATION ONLY)	6 C11.0
FIXED BASE BOLLARD (INSTALLATION ONLY)	5 C11.0

KEY NOTES

1A	30" CURB AND GUTTER	3 C11.0
1B	30" CURB AND GUTTER	
2	30" MOUNTABLE CURB	8 C11.0
3	24" FLOWLINE CURB	9 C11.0
4	PAVEMENT STRIPING	1 C11.1
5	DIRECTIONAL ARROWS	1 C11.1
6	TYPE 2 CURB RAMP	4 C11.0
7	TYPE 1-A CURB RAMP	4 C11.0
8	24" CONCRETE BAND	7 C11.0
9	TREE GRATE INSTALLATION ONLY	5 C11.3
10	PLANTER CURB	11 C11.0
11	16" ORNAMENTAL METAL FENCING	3 C11.3
12	8' ORNAMENTAL METAL FENCING	4 C11.3
13	8' x 8' ORNAMENTAL METAL GATE	6 C11.3
14	FOUNTAIN INSTALLATION	C11.4, C11.5
15	CURB TERMINUS	10 C11.0
16	4' X 4' TRANSFORMER PAD	
17	BRICK PIER	1 C11.3
18	SLATE COLORED CONCRETE BAND (ALTERNATE A2)	
19	STOP SIGN, ONE WAY (RIGHT ONLY) SIGN	
20	HANDICAP SIGN (FASTEN TO BOLLARD)	2 C11.1

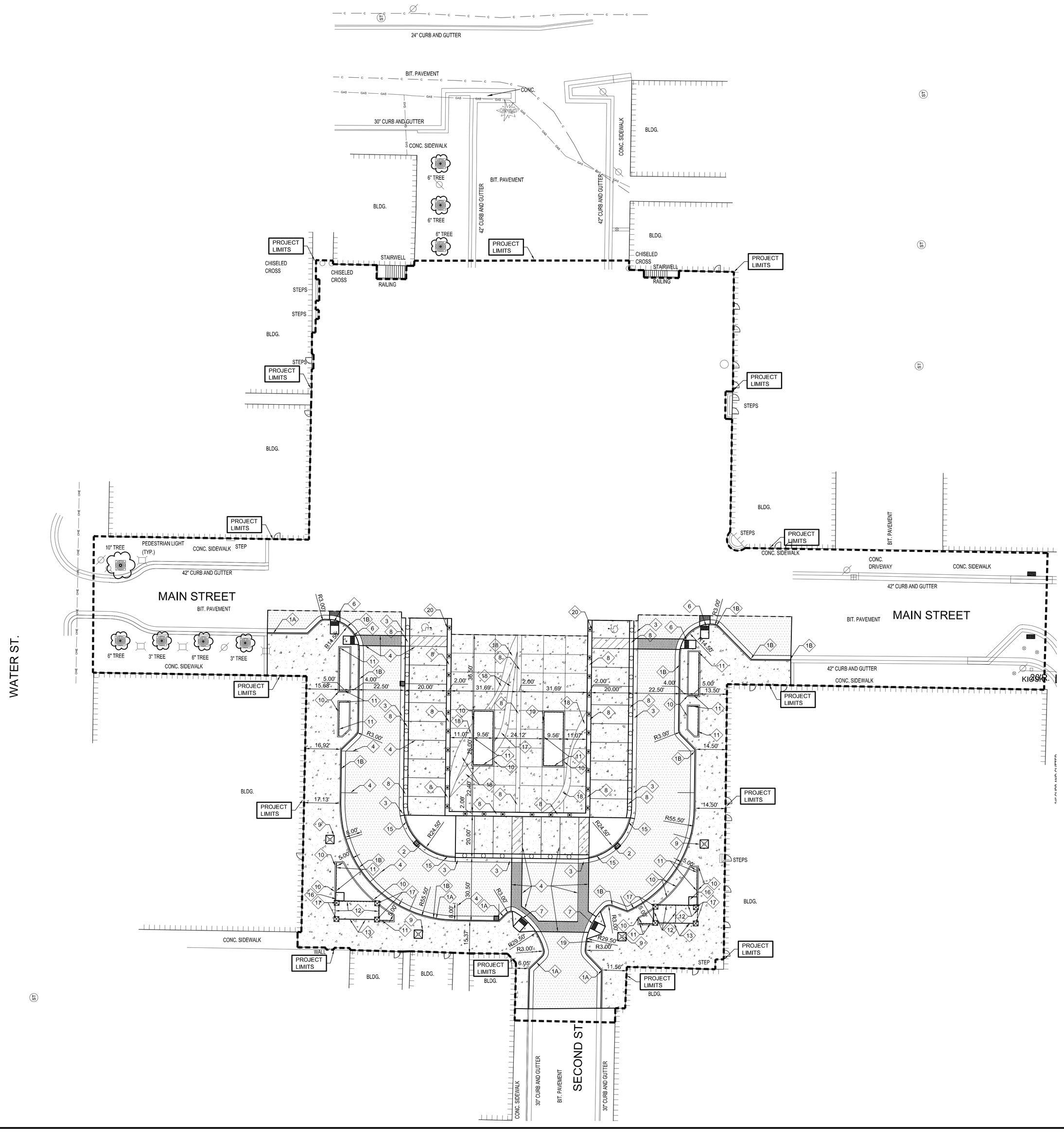

RETTLER CORPORATION, INC. HOLDS THE RIGHTS TO COPYRIGHT IN AND TO THESE PRINTS, DRAWINGS AND DOCUMENTS. NO REPRODUCTION, COPYING, ALTERATION, MODIFICATION, USAGE, INCORPORATION INTO OTHER DOCUMENTS OR ASSIGNMENT OF THE SAME MAY OCCUR WITHOUT THE PRIOR WRITTEN PERMISSION OF RETTLER CORPORATION, INC.

©2011 RETTLER CORPORATION, INC.

REV	DATE	ISSUED FOR
	2/18/11	BID

DRAWN: J. KNEER
CHECKED: J. KNEER
DOCUMENT NO. 10.020

RETTLER corporation
5317 Businessz Park Drive, Stevens Point, WI 54481
Phone: 715-344-7500 Fax: 715-344-7501
email: info @ rettler.com web site: www.rettler.com

SITE LAYOUT PLAN - PHASE 2

CITY OF STEVENS POINT
MATHIAS MITCHELL PUBLIC SQUARE
STEVENS POINT, WISCONSIN

C5.1

GRADING/ EROSION CONTROL LEGEND

PROPOSED CONTOURS	1091.5
EXISTING CONTOURS	1090.0
PROPOSED SPOT ELEVATION	1091.25
PROPOSED RIM ELEVATION	R 1091.25
PROPOSED FLOWLINE ELEVATION	F 1091.25
STORM INLET PROTECTION	3,4 / C11.1

CONSTRUCTION EROSION CONTROL SEQUENCE

CONSTRUCTION ACTIVITY*	SCHEDULED CONTROL MEASURES
1. Construction access - Construction entrance, construction routes, and equipment parking areas	First land disturbing activity - Bare areas will be stabilized with gravel as construction takes place.
2. Inlet protection - The installation of inlet and outlet protection.	Set up inlet protection units after project site is accessed.
3. Runoff control - Runoff is limited to interior of project.	Install erosion mat, polymer blocks and additional practices outlined above as necessary during grading.
4. Runoff conveyance system - Construct storm sewer system.	Install principal runoff conveyance system with runoff control measures. Stabilize storm drains, inlet and outlet protection as early as possible.
5. Land clearing and grading - Site preparation, cutting, filling, grading and topsoil stockpiles.	Begin major clearing and grading after principal erosion control practices have been installed. Clear and grade only as needed. Install additional measures as necessary such as silt fence or sprayed polymer around topsoil stockpiles. Areas within 30 feet of state water bodies with be stabilized with erosion mats. Mark trees and buffer areas for preservation.
6. Surface stabilization - Temporary and permanent seeding, native grasses, mulching, sodding, and riprap	Apply temporary or permanent stabilization measures immediately on all disturbed areas where work is delayed or incomplete.
7. Landscaping and final stabilization - Topsoiling, trees and shrubs, permanent seeding, mulching, sodding, riprap	Last construction phase - Stabilize all open areas, including borrow and spoil areas. Remove and stabilize all temporary practices.
8. Winter stabilization - In the event the project is not completed before November 2011	Apply sprayed polymer around stock piles and open areas not yet stabilized. Monitor per supplier recommendations.

GENERAL NOTES

1. CONTACT DIGGER'S HOTLINE 5 WORKING DAYS PRIOR TO THE START OF CONSTRUCTION.
2. GRADE, LINE, AND LEVEL TO BE REVIEWED IN THE FIELD BY THE CONSTRUCTION MANAGER.
3. ALL RIM ELEVATIONS FOR ALL UTILITY STRUCTURES SHALL BE ADJUSTED BY CONTRACTOR TO MATCH FINISH GRADE.
4. ALL EXISTING ROOF DRAINS SHALL BE DIRECTED TO THE NEAREST STORM STRUCTURE.
5. PLACE SILT FENCING UNDER THE PROPOSED AND EXISTING CATCH BASINS, MANHOLES, AND INLETS GRATES FOR THE DURATION OF CONSTRUCTION.
6. ALL EXISTING UTILITIES WHICH ARE NOT SHOWN ON THESE DOCUMENTS WHICH NEED TO BE REMOVED, RELOCATED, AND OR ADJUSTED SHALL BE THE RESPONSIBILITY OF THE SITE CONTRACTOR AND INCLUDED IN THE BASE BID.
7. ALL BIDDERS SUBMITTING A BID SHALL VISIT THE SITE PRIOR TO SUBMITTING A BID AND REVIEW THE EXISTING CONDITIONS OF THE SITE.
8. THE SITE CONTRACTOR SHALL INSTALL AND MAINTAIN ALL EROSION CONTROL ELEMENTS IN ACCORDANCE WITH THE DEPARTMENT OF NATURAL RESOURCES AND THE LOCAL GOVERNING AUTHORITIES REGULATIONS.
9. INSPECT ALL EROSION CONTROL ELEMENTS WEEKLY OR AFTER STORM EVENTS OF 1/2" OF RAIN OR GREATER AND DOCUMENT IN ACCORDANCE WITH THE REQUIREMENTS OF THE DEPARTMENT OF NATURAL RESOURCES.
10. ALL EROSION CONTROL METHODS SHALL BE INSTALLED AND MAINTAINED AS PER THE GOVERNING AUTHORITY.
11. ALL WASTE AND UNUSED BUILDING MATERIALS SHALL BE PROPERLY DISPOSED OF AND NOT ALLOWED TO BE CARRIED OFF-SITE BY RUNOFF OR WIND.
12. STREET CLEANING SHALL BE PERFORMED DAILY AT THE END OF CONSTRUCTION, DUST CONTROL SHALL BE EXECUTED PER SPECIFICATIONS.
13. ALL OFF SITE SEDIMENT DEPOSITS OCCURRING AS A RESULT OF CONSTRUCTION WORK OR A STORM EVENT SHALL BE CLEANED UP BY THE END OF EACH DAY. FLUSHING SHALL NOT BE ALLOWED.
14. THE CONTRACTOR SHALL NOTIFY THE LOCAL GOVERNMENT EROSION CONTROL INSPECTOR AT LEAST 2 DAYS PRIOR TO THE START OF SOIL DISTURBING ACTIVITIES.
15. BUILDING/PAVING PERMITS WILL BE WITHHELD UNTIL ALL INITIAL EROSION CONTROL PRACTICES ARE IMPLEMENTED AND APPROVED BY THE GOVERNING AUTHORITY EROSION CONTROL INSPECTOR.
16. ALL ACTIVITIES SHALL BE CONDUCTED IN A LOGICAL SEQUENCE AS TO MINIMIZE THE AMOUNT OF BARE SOIL EXPOSED AT ANY ONE TIME. MAINTAIN EXISTING VEGETATION AS LONG AS POSSIBLE.
17. ALL SEDIMENT LADEN WATER PUMPED FROM THE SITE SHALL BE TREATED BY A TEMPORARY SEDIMENT BASIN OR BE FILTERED BY OTHER APPROVED MEANS. WATER SHALL NOT BE DISCHARGED IN A MANNER THAT CAUSES EROSION OF THE SITE OR RECEIVING CHANNELS.
18. DISTURBED GROUND OUTSIDE OF THE EVERYDAY CONSTRUCTION AREA, INCLUDING SOIL STOCKPILES LEFT INACTIVE FOR MORE THAN 10 DAYS, SHALL AT A MINIMUM BE TEMPORARILY STABILIZED BY SEEDING/MULCHING OR OTHER METHODS APPROVED BY THE LOCAL GOVERNING AUTHORITY'S EROSION CONTROL INSPECTOR.
19. IN THE CASE OF LATE SEASON AND WINTER CONSTRUCTION, RESTORATION/LANDSCAPING OF THE SITE SHALL OCCUR NO LATER THAN JUNE 1ST OF THE NEXT CONSTRUCTION SEASON. EROSION CONTROL MEASURES SHALL REMAIN INTACT UNTIL FINAL RESTORATION OF THE SITE IS COMPLETE. FABRIC INSIDE THE INLET AND CATCH BASIN GRATING SHALL BE REMOVED AS SOON AS FREEZING WEATHER OCCURS SO DRAINAGE IS NOT IMPAIRED THROUGHOUT THE WINTER MONTHS. ALL EROSION CONTROL PRACTICES REMOVED OR DAMAGED DUE TO WINTER WEATHER SHALL BE REPLACED IN THE SPRING IMMEDIATELY AFTER THE THAW.
20. EROSION CONTROL DEVICES DESTROYED AS A RESULT OF CONSTRUCTION ACTIVITIES SHALL BE REPAIRED BY THE END OF THE WORK DAY.
21. TEMPORARY EROSION CONTROL MEASURES SHALL BE REMOVED AT THE CONCLUSION OF CONSTRUCTION AFTER STABILIZATION OF DISTURBED SOIL HAS OCCURRED.
22. GEOTEXTILE FILTER FABRIC USED AS A SEDIMENT BARRIER IN STORM DRAIN INLETS AND CATCH BASINS SHALL BE GTF 403 AS MANUFACTURED BY LINQ INDUSTRIAL FABRICS, OR FILTERWEAVE 401, AS MANUFACTURED BY TC MIRAFI. FABRIC SHALL BE PLACED UNDER THE GRATE, WITH A MINIMUM OF 8 INCHES OF FABRIC EXTENDING BEYOND THE GRATING TO PROVIDE A HAND HOLD WHEN REMOVING. SILT FENCE MATERIAL IS NOT APPROVED FOR USE IN INLETS AS FLOW RATES ARE INSUFFICIENT AND EXCESSIVE PONDING/FLOODING MAY OCCUR. FABRIC SHALL NOT BE RIPPED OR CUT TO PREVENT PONDING. IF FABRIC IS RIPPED IT SHALL BE REPLACED IMMEDIATELY. ALTERNATE PROTECTION SHALL BE USED IF PONDING MAY CAUSE DAMAGE TO ADJACENT BUILDINGS AND/OR PROPERTIES.
23. EROSION CONTROL SHALL BE IN ACCORDANCE WITH THE LOCAL GOVERNING AUTHORITY EROSION CONTROL ORDINANCE AND CHAPTER NR 216 OF THE WISCONSIN ADMINISTRATIVE CODE. THE PROPERTY OWNER OR HIS REPRESENTATIVE IS REQUIRED TO MAKE EROSION CONTROL INSPECTIONS AT THE END OF EACH WEEK AND WHEN 0.5 INCHES OF RAIN FALLS WITHIN 24 HOURS. INSPECTION REPORTS SHALL BE PREPARED AND FILED AS REQUIRED AND SUBMITTED TO THE LOCAL GOVERNING AUTHORITY'S PROJECT INSPECTOR.

N

0' 20' 40' 60'

RETTLER CORPORATION, INC. HOLDS THE RIGHTS TO COPYRIGHT IN AND TO THESE PRINTS, DRAWINGS AND DOCUMENTS. NO REPRODUCTION, COPYING, ALTERATION, MODIFICATION, USAGE, INCORPORATION INTO OTHER DOCUMENTS OR ASSIGNMENT OF THE SAME MAY OCCUR WITHOUT THE PRIOR WRITTEN PERMISSION OF RETTLER CORPORATION, INC.

©2011 RETTLER CORPORATION, INC.

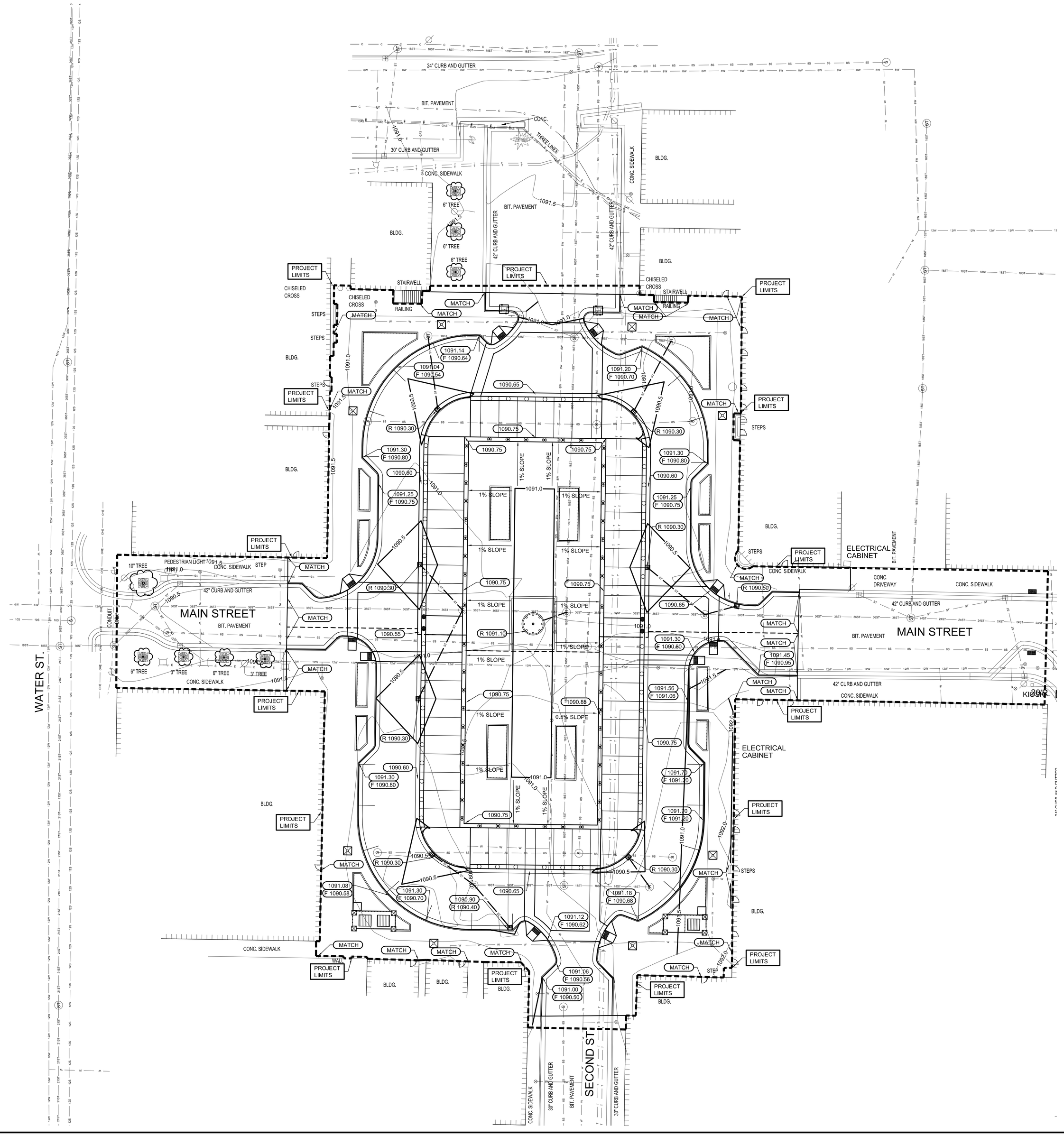

REV	DATE	ISSUED FOR
	2/18/11	BID

DRAWN: J. KNEER
CHECKED: J. KNEER
DOCUMENT NO. 10.020

RETTLER corporation
5317 Business Park Drive, Stevens Point, WI 54481
Tel: 715.344.7100 Fax: 715.344.7101
email: info @ rettler.com web site: www.rettler.com

SITE GRADING AND EROSION CONTROL PLAN

CITY OF STEVENS POINT
MATHIAS MITCHELL PUBLIC SQUARE
STEVENS POINT, WISCONSIN

C6.0

GENERAL NOTES

1. CONTACT DIGGERS HOTLINE 5 WORKING DAYS PRIOR TO THE START OF CONSTRUCTION.
2. STORM SEWER CONTRACTOR SHALL COORDINATE INSTALLATION OF SEWER PIPE PROJECT COORDINATOR PRIOR TO START OF CONSTRUCTION WITH CONSTRUCTION MANAGER.
3. ANY EXISTING UTILITIES NOT SHOWN ON THESE DOCUMENTS WHICH NEED TO BE REMOVED, RELOCATED AND OR ADJUSTED SHALL BE THE RESPONSIBILITY OF THE CONTRACTOR AND INCLUDED IN THE BID.
4. COORDINATE ALL UTILITY RELOCATION WITH THE PROPER UTILITY COMPANY.
5. STORM SEWER CONTRACTOR SHALL VERIFY ALL EXISTING STORM SEWER ELEVATIONS WHERE THE PROPOSED STORM SEWER IS DESIGNED TO CONNECT TO EXISTING STORM SEWER STRUCTURES.
6. SEE SPECIFICATIONS MANUAL FOR ALL PROPOSED ITEMS TO BE BID AS PART OF BASE BID.
7. DO NOT DISTURB AREA OUTSIDE PROJECT LIMITS.

INLET SCHEDULE

INLET 1 (5 / C11.1)
RIM 1090.30
INV. (N) 1083.37
DEPTH 6.93'
36" CONC. MANHOLE
R-3010-L CASTING
D-SHAPED CURB FACE
WITH 3000-A

INLET 2 (5 / C11.1)
RIM 1090.30
INV. (NE) 1083.59
DEPTH 6.71'
36" CONC. MANHOLE
R-3010-L CASTING
D-SHAPED CURB FACE
WITH 3000-A

INLET 3 (5 / C11.1)
RIM 1090.30
INV. (SE) 1081.52
DEPTH 8.78'
36" CONC. MANHOLE
R-3508-B CASTING

INLET 4 (5 / C11.1)
RIM 1090.50
INV. (SW) 1080.89
DEPTH 9.61'
36" CONC. MANHOLE
R-3010-L CASTING
1½" RADIUS
WITH 3000-A

INLET 5 (5 / C11.1)
RIM 1090.30
INV. (SE) 1082.79
DEPTH 7.51'
36" CONC. MANHOLE
R-3010-L CASTING
D-SHAPED CURB FACE
WITH 3000-A

INLET 6 (5 / C11.1)
RIM 1090.30
INV. (SE) 1082.91
DEPTH 7.39'
36" CONC. MANHOLE
R-3010-L CASTING
D-SHAPED CURB FACE
WITH 3000-A

INLET 7 (5 / C11.1)
RIM 1090.30
INV. (NE) 1081.64
DEPTH 8.66'
36" CONC. MANHOLE
R-3508-B CASTING

INLET 8 (5 / C11.1)
RIM 1090.30
INV. (SE) 1081.10
DEPTH 9.20'
36" CONC. MANHOLE
R-3508-B CASTING

INLET 9 (5 / C11.1)
RIM 1090.40
INV. (SE) 1081.20
DEPTH 9.20'
36" CONC. MANHOLE
R-3010-L CASTING
1½" RADIUS
WITH 3000-A

TRENCH (2 / C11.3)
RIM 1091.10
PERFORMED TRENCH
DRAIN
(INSTALLATION ONLY)

PIPE SCHEDULE

PIPE #	FROM STRUCTURE	TO STRUCTURE	APPROX. LENGTH	SLOPE	PIPE SIZE	PIPE MTL
A	INLET 2	EXISTING	40'	3.00%	12"	RCP
B	INLET 3	EXISTING	37'	3.00%	12"	RCP
C	INLET 4	EXISTING	16'	3.00%	12"	RCP
D	INLET 5	EXISTING	18'	3.00%	12"	RCP
E	INLET 6	EXISTING	26'	3.00%	12"	RCP
F	INLET 7	EXISTING	49'	3.00%	12"	RCP
G	INLET 8	EXISTING	31'	3.00%	12"	RCP
H	INLET 1	EXISTING	37'	3.00%	12"	RCP
I	INLET 9	EXISTING	28'	3.00%	12"	RCP
J	TRENCH	EXISTING	12'	3.00%	6"	ADS

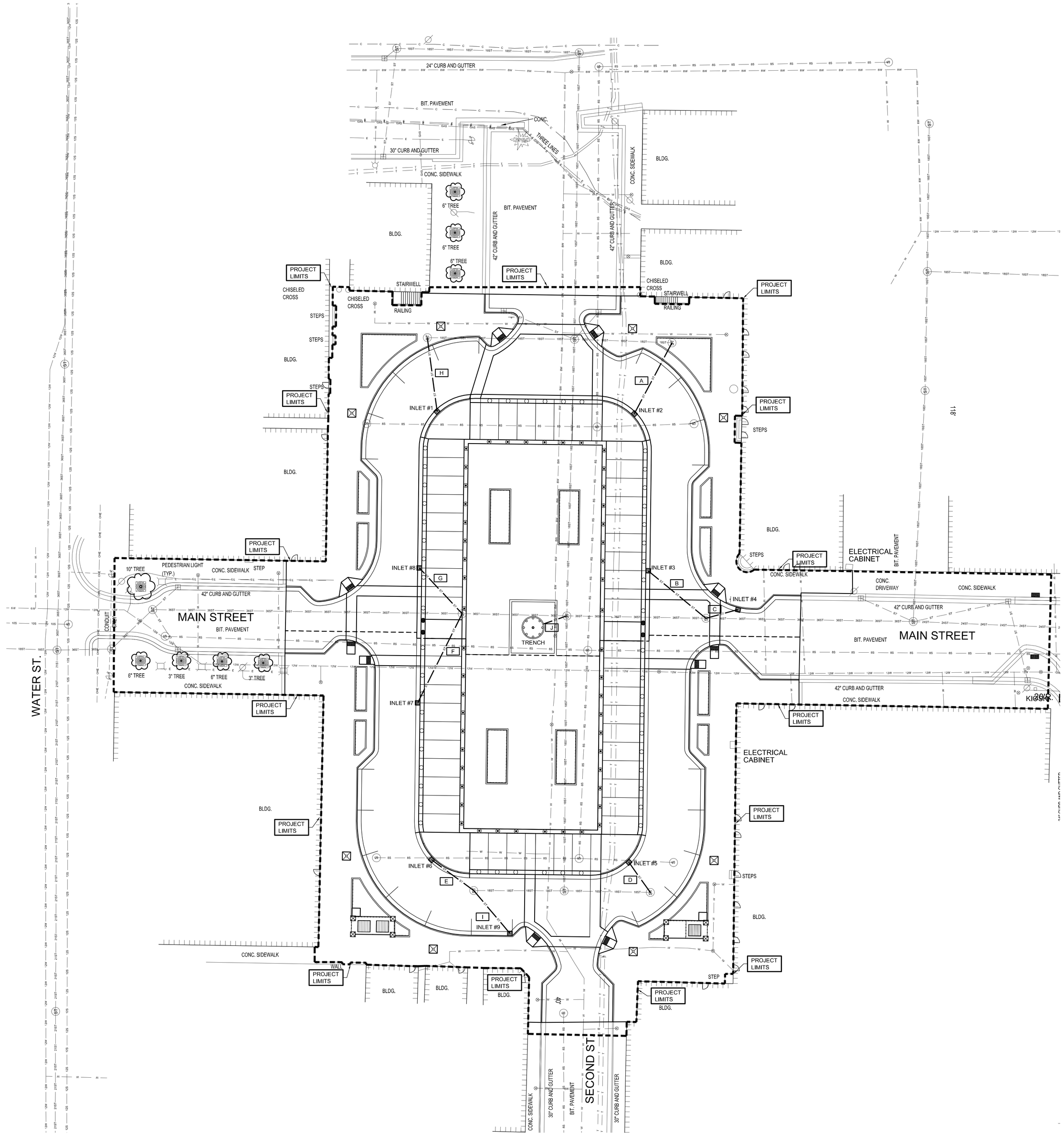

N

0' 20' 40' 60'

RETTLER CORPORATION, INC. HOLDS THE RIGHTS TO COPYRIGHT IN AND TO THESE PRINTS, DRAWINGS AND DOCUMENTS. NO REPRODUCTION, COPYING, ALTERATION, MODIFICATION, USAGE, INCORPORATION INTO OTHER DOCUMENTS OR ASSIGNMENT OF THE SAME MAY OCCUR WITHOUT THE PRIOR WRITTEN PERMISSION OF RETTLER CORPORATION, INC.
©2011 RETTLER CORPORATION, INC.

REV	DATE	ISSUED FOR
	2/18/11	BID

DRAWN: K. PANKRATZ
CHECKED: J. KNEER
DOCUMENT NO. 10.020

RETTLER corporation
5317 Business Park Drive, Stevens Point, WI 54481
Tel: 715.344.7500 Fax: 715.344.7501
email: info @ rettler.com web site: www.rettler.com

SITE STORM SEWER PLAN

CITY OF STEVENS POINT
MATHIAS MITCHELL PUBLIC SQUARE
STEVENS POINT, WISCONSIN

C7.0

GENERAL NOTES

1. CONTACT DIGGER'S HOTLINE 3 WORKING DAYS PRIOR TO THE START OF CONSTRUCTION.
2. MAINTAIN ALL CODES REQUIRED BY LOCAL AND STATE AUTHORITIES.
3. ALL TRENCHES SHALL BE WIDE ENOUGH TO ACCOMMODATE A MINIMUM OF 2" BETWEEN PIPE AND TRENCH WALL.
4. BURY LATERAL LINES WITH A MINIMUM OF 16" OF COVER. MAIN LINES SHALL HAVE A MINIMUM OF 18" COVER.
5. ALL LATERAL PIPING SHALL BE SIZED AS STATED.
6. INSTALL ALL PIPING AND FITTINGS USING GLUE AND THRUST BLOCKING METHODS CONSISTENT WITH MANUFACTURERS RECOMMENDATIONS.
7. CAP OR PLUG ALL OPENINGS AS SOON AS LINES ARE INSTALLED TO PREVENT DEBRIS IN THE LINE.
8. THOROUGHLY FLUSH ALL LINES PRIOR TO THE OPERATION OF SPRINKLER HEADS.
9. INSTALL WIRES PER MANUFACTURER RECOMMENDATIONS. -SPLICES ARE NOT ALLOWED IN THE TRENCH. -PROVIDE A 24" EXPANSION LOOP AT EACH CHANGE IN DIRECTION.
10. THE IRRIGATION SYSTEM SHALL BE TESTED AT OPERATING PRESSURE AND HOLD FOR A MINIMUM OF 4 HOURS. REPAIR ALL LEAKS AND RETEST AFTER CURING. PRESSURE TESTS TO BE PERFORMED BEFORE PAVING.
11. UPON COMPLETION OF TEST, COMPLETE ASSEMBLY OF ALL EQUIPMENT AND SPRINKLERS FOR PROPER DISTRIBUTION.
12. PROVIDE 'AS BUILT' DRAWINGS.
13. ALL GASKETED PRESSURE PIPE AND FITTINGS SHALL BE THRUST BLOCKED. NO CONCRETE PERFORMED BLOCKS WILL BE ALLOWED.
14. IRRIGATION CONTRACTOR SHALL VERIFY WATER PRESSURE AND VOLUME AT CONNECTION POINT PRIOR TO IRRIGATION INSTALLATION
15. ALL BIDDERS SUBMITTING A BID SHALL VISIT AND REVIEW THE SITE PRIOR TO SUBMITTING A BID.
16. PLOWING OF LATERAL LINES MAY BE ACCEPTABLE IF CONDITIONS ALLOW CONTRACTOR TO HAVE LANDSCAPE ARCHITECTS APPROVAL TO USE PLOWING METHODS.
17. IRRIGATION CONTRACTOR SHALL SUBMIT ALL IRRIGATION DESIGN CHANGES TO LANDSCAPE ARCHITECT PRIOR TO INSTALLATION.
18. ALL DESIGN INFORMATION SHOWN IS BASED ON SPECIFICATIONS FROM HUNTER BASED IRRIGATION PRODUCTS.

IRRIGATION LEGEND

- HUNTER RZWS-36-50 WITH FILTER WRAP
- HUNTER INST-00-A NOZZLES PER SPACING ON PLAN — 4 / C11.2
- HUNTER SOLAR SYNCH.
- 2" CL 200 PVC PIPE - MAINLINE
- 1½" CL 200 PE PIPE - LATERALS
- SCH. 40 PVC PIPE SLEEVING — 2 / C11.2
- HUNTER ICORE IC-600-M-PED CONTROLLER WITH DUAL 48 M MODULE
- ISOLATION VALVE SIZED TO PIPE — 3 / C11.2
- 1" HUNTER QUICK COUPLER — 5 / C11.2
- HUNTER ICV SERIES ELECTRIC VALVE 1" (ICV-201G-FS)
- 3" WATTS 009 NRS BACKFLOW UNIT — 9 / C11.1
- BLOW OUT TAP BELOW FROST LINE -1" QUICK COUPLER BROUGHT TO SURFACE (BY OWNER) — 9 / C11.1
- POINT OF CONNECTION-BY OWNER. TAP TO BE 3". FOLLOW LOCAL CODES. (BY OWNER) — 9 / C11.1

EQUIPMENT NOTES

1. ALL PVC PIPING SHALL BE AS INDICATED IN THE KEY.
2. LATERAL FITTINGS SHALL BE SOLVENT WELD.
3. ISOLATION VALVES SHALL BE A BRONZE TYPE THREADED VALVE WITH CROSS HANDLES.
4. DRAWING IS SCHEMATIC AND MAY BE SHOWN OUTSIDE OF INTENDED AREAS FOR EASE OF READING.

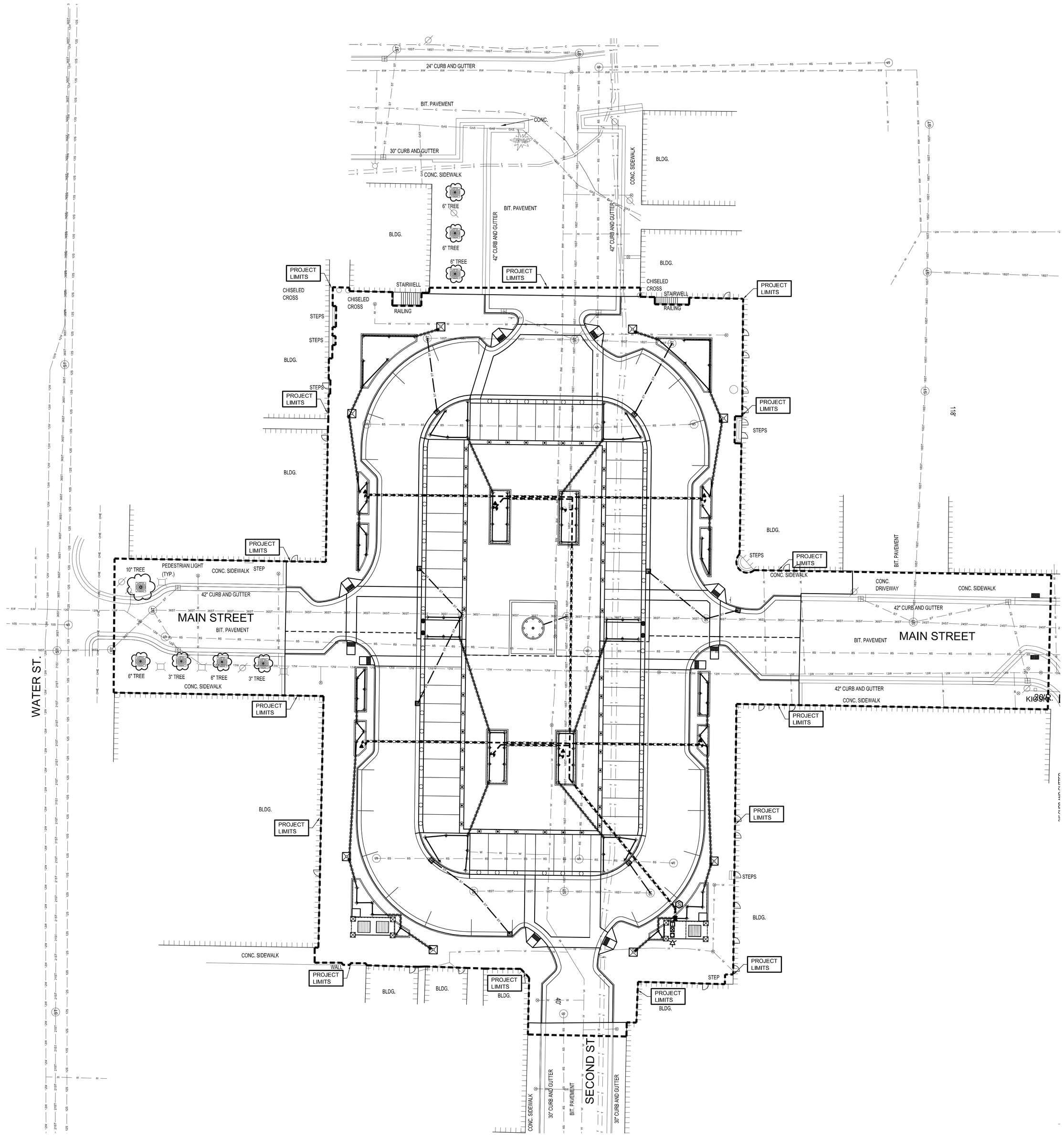

N

0' 20' 40' 60'

RETTLER CORPORATION, INC. HOLDS THE RIGHTS TO COPYRIGHT IN AND TO THESE PRINTS, DRAWINGS AND DOCUMENTS. NO REPRODUCTION, COPYING, ALTERATION, MODIFICATION, USAGE, INCORPORATION INTO OTHER DOCUMENTS OR ASSIGNMENT OF THE SAME MAY OCCUR WITHOUT THE PRIOR WRITTEN PERMISSION OF RETTLER CORPORATION, INC.
©2011 RETTLER CORPORATION, INC.

REV	DATE	ISSUED FOR
	2/18/11	BID

DRAWN: J. KNEER
CHECKED: J. KNEER
DOCUMENT NO. 10.020

RETTLER corporation
5317 Business Park Drive, Stevens Point, WI 54481
Tel: 715.344.7500 Fax: 715.344.7501
email: info @ rettler.com web site: www.rettler.com

SITE IRRIGATION PLAN

CITY OF STEVENS POINT
MATHIAS MITCHELL PUBLIC SQUARE
STEVENS POINT, WISCONSIN

C8.0

GENERAL NOTES

1. CONTACT DIGGER'S HOTLINE 3 WORKING DAYS PRIOR TO THE START OF CONSTRUCTION.
2. MAINTAIN ALL CODES REQUIRED BY LOCAL AND STATE AUTHORITIES.
3. ALL TRENCHES SHALL BE WIDE ENOUGH TO ACCOMMODATE A MINIMUM OF 2" BETWEEN PIPE AND TRENCH WALL.
4. ALL BIDDERS SUBMITTING A BID SHALL VISIT AND REVIEW THE SITE PRIOR TO SUBMITTING A BID.
5. FOUNTAIN CONTRACTOR SHALL SUBMIT ALL FOUNTAIN DESIGN CHANGES TO LANDSCAPE ARCHITECT PRIOR TO INSTALLATION.
6. ALL DESIGN INFORMATION SHOWN IS BASED ON SPECIFICATIONS FROM THE FOUNTAIN PEOPLE.
7. FOUNTAIN LAYOUT PLAN IS FOR SCHEMATIC PURPOSES ONLY, NOT ALL PIPING IS SHOWN ON THIS PLAN. SEE FOUNTAIN DETAILS AND SPECIFICATIONS.

FOUNTAIN LAYOUT LEGEND

C11.4 / C11.5

- FIC-S700 (INSTALLATION ONLY)
- FIC-G1100 (INSTALLATION ONLY)
- CWS-075 WIND SENSOR (INSTALLATION ONLY) (ATTACH TO LIGHT POLE. WIRE THROUGH LIGHT POLE AND CONDUIT BACK TO CONTROLLER)
- 3" PIPE
- 1.5" PIPE
- 1" PIPE
- 4" SCH. 40 PVC PIPE SLEEVING
- F CPL-1187 FOUNTAIN CONTROL PANEL (INSTALLATION ONLY)
- X VM-6-11887 DISTRIBUTION MANIFOLD (INSTALLATION ONLY)
- POINT OF CONNECTION-BY OWNER. TAP TO BE 3". FOLLOW LOCAL CODES. (BY OWNER) — 9 / C11.1

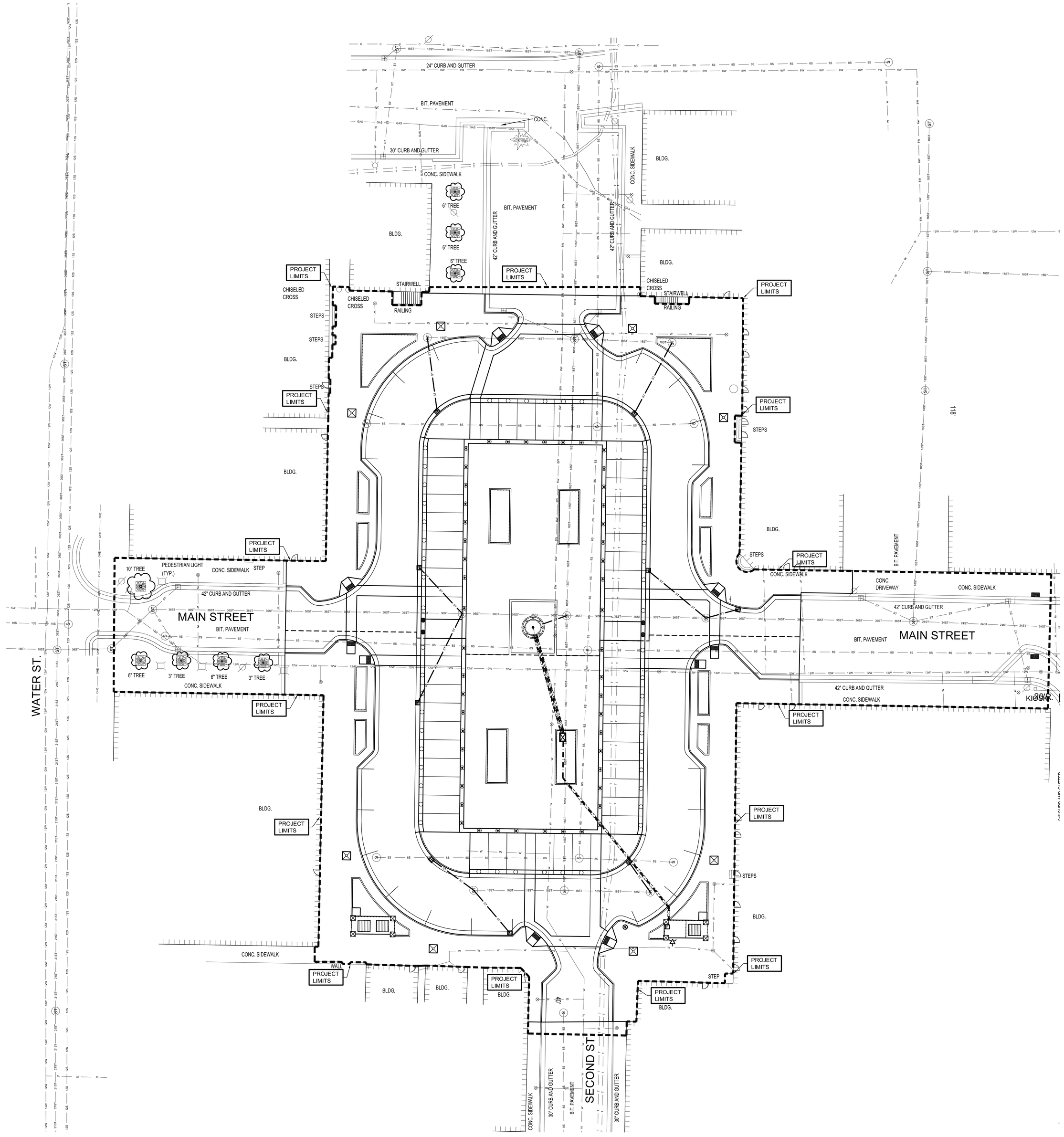

N

0' 20' 40' 60'

RETTLER CORPORATION, INC. HOLDS THE RIGHTS TO COPYRIGHT IN AND TO THESE PRINTS, DRAWINGS AND DOCUMENTS. NO REPRODUCTION, COPYING, ALTERATION, MODIFICATION, USAGE, INCORPORATION INTO OTHER DOCUMENTS OR ASSIGNMENT OF THE SAME MAY OCCUR WITHOUT THE PRIOR WRITTEN PERMISSION OF RETTLER CORPORATION, INC.
©2011 RETTLER CORPORATION, INC.

REV	DATE	ISSUED FOR
	2/18/11	BID

DRAWN: J. KNEER
CHECKED: J. KNEER
DOCUMENT NO. 10.020

RETTLER corporation
5317 Business Park Drive, Stevens Point, WI 54481
Phone: 715-344-7500 Fax: 715-344-7501
email: info @ rettler.com web site: www.rettler.com

SITE FOUNTAIN LAYOUT PLAN

CITY OF STEVENS POINT
MATHIAS MITCHELL PUBLIC SQUARE
STEVENS POINT, WISCONSIN

C9.0

GENERAL NOTES

1. CONTACT DIGGER'S HOTLINE 5 WORKING DAYS PRIOR TO THE START OF CONSTRUCTION.
2. CONTRACTOR SHALL VERIFY THE LOCATION OF ALL THE PRIVATE UTILITIES PRIOR TO THE START OF WORK.
3. ALL PLANTS SHALL BE REVIEWED AND APPROVED BY THE PROJECT LANDSCAPE ARCHITECT PRIOR TO INSTALLATION.
4. ALL LANDSCAPE BEDS SHALL CONTAIN A 4" DEPTH OF SHREDDED HARDWOOD BARK MULCH.
5. ALL LANDSCAPE AREAS SHALL BE FINISH GRADED, AND PLANTED PER THE PROJECT MANUAL SPECIFICATIONS.
6. ALL GENERAL LANDSCAPE AREAS SHALL HAVE A MINIMUM 36" COMPACTED DEPTH OF TOPSOIL.
7. SEE THE PROJECT MANUAL FOR SPECIFICATIONS AND REQUIREMENTS FOR PLANTING, STAKING OF TREES, WARRANTY PERIOD, MAINTENANCE , ETC.
8. SEE DETAILS FOR PLANTING INSTALLATION.

PLANT SCHEDULE

Code Name	Scientific Name	Common Name	Quantity	Planting Size
Acgm	Acer saccharum 'Green Mountain'	'Green Mountain' Sugar maple	8	6"-Cal
Cakf	Calamagrostis acutiflora 'Karl Foerster'	'Karl Foerster' feather reed grass	127	# 2 Pot
Caca	Carpinus caroliniana	American Hornbeam	8	3"-Cal
	Euonymus fortunei 'Kewensis'	'Kewensis' winter creeper	600	Flat
Gema	Geranium x magnificum	Showy Geranium	490	#1 Pot
Gtis	Gleditsia triacanthos var. inermis 'Skyline'	'Skyline' Thornless honeylocust	4	4"-Cal
Hesdo	Hemerocallis 'Stella de Oro'	'Stella de Oro' Daylily	148	#1 Pot
Ilgl	Ilex glabra 'Compacta'	'Compacta' Inkberry holly	12	24"
Lemc	Leucanthemum maximum 'Crazy Daisy'	'Crazy Daisy' Shasta daisy	149	#1 Pot
	Liriope spicata	Creeping lily-turf	140	Flat
Nefs	Nepeta x faassenii 'Six Hills Giant'	'Six Hills Giant' Nepeta	38	# 2 Pot
Syrel	Syringa reticulata 'Ivory Silk'	'Ivory Silk' Japanese tree lilac	8	3"-Cal
RoruA	Rosa rugosa 'Frau Dagmar Hastrup'	'Frau Dagmar Hastrup' Rugosa rose	12	24"
Spbu	Spiraea bumalda 'Goldflame'	'Goldflame' Bumald spirea	12	18"
Vica	Viburnum carlesii 'Compactum'	'Compactum' Koreanspice virburnum	8	24"

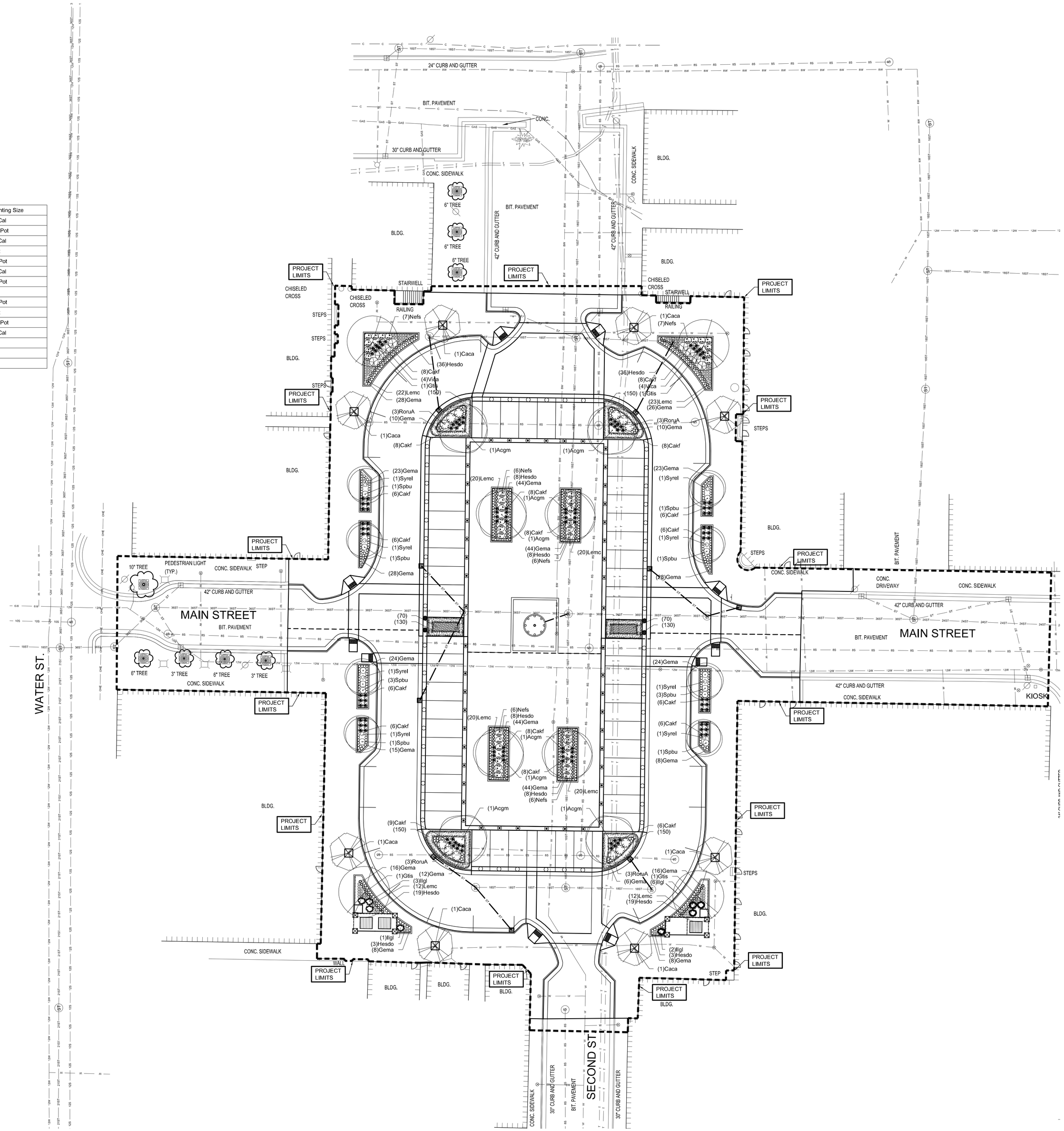

RETTLER CORPORATION, INC. HOLDS THE RIGHTS TO COPYRIGHT IN AND TO THESE PRINTS, DRAWINGS AND DOCUMENTS. NO REPRODUCTION, COPYING, ALTERATION, MODIFICATION, USAGE, INCORPORATION INTO OTHER DOCUMENTS OR ASSIGNMENT OF THE SAME MAY OCCUR WITHOUT THE PRIOR WRITTEN PERMISSION OF RETTLER CORPORATION, INC.

©2011 RETTLER CORPORATION, INC.

REV	DATE	ISSUED FOR
	2/18/11	BID

DRAWN: J. KNEER
CHECKED: J. KNEER
DOCUMENT NO. 10.020

RETTLER corporation
5317 Business Park Drive, Stevens Point, WI 54481
Tel: 715-344-7500 Fax: 715-344-7501
email: info @ rettler.com web site: www.rettler.com

SITE LANDSCAPE PLAN

CITY OF STEVENS POINT
MATHIAS MITCHELL PUBLIC SQUARE
STEVENS POINT, WISCONSIN

C10.0

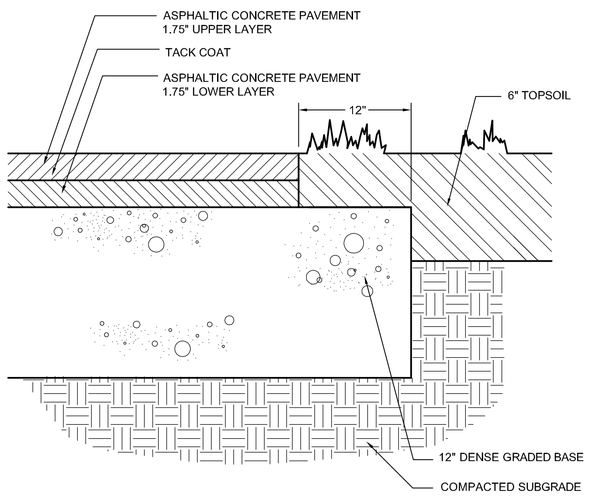

1. 3.5" ASPHALT PAVEMENT

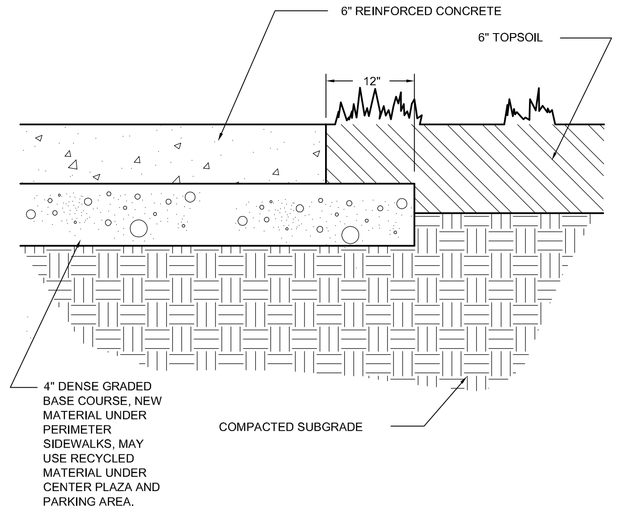

NOTE: CONSTRUCTION JOINTS SHALL BE SPACED NO MORE THAN 10'-0" O.C.

2. 6" REINFORCED CONCRETE PAVEMENT

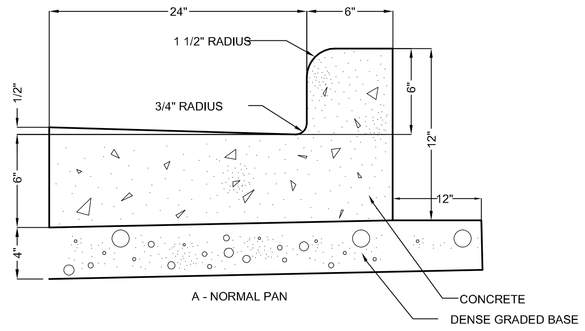

A - NORMAL PAN

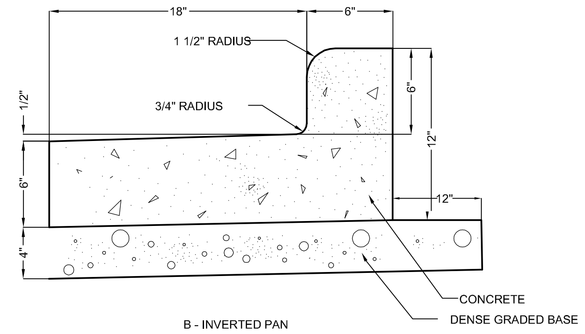

B - INVERTED PAN

3. 30" CURB

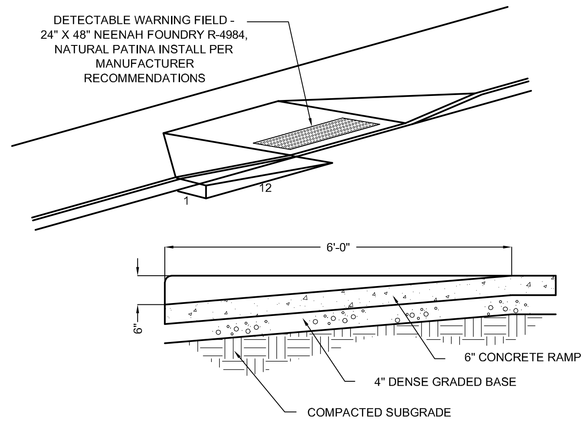

RAMP PROFILE

REFER TO WISDOT FDM FOR RAMP TYPES CALLED OUT IN PLANS

4. CONCRETE CURB RAMP

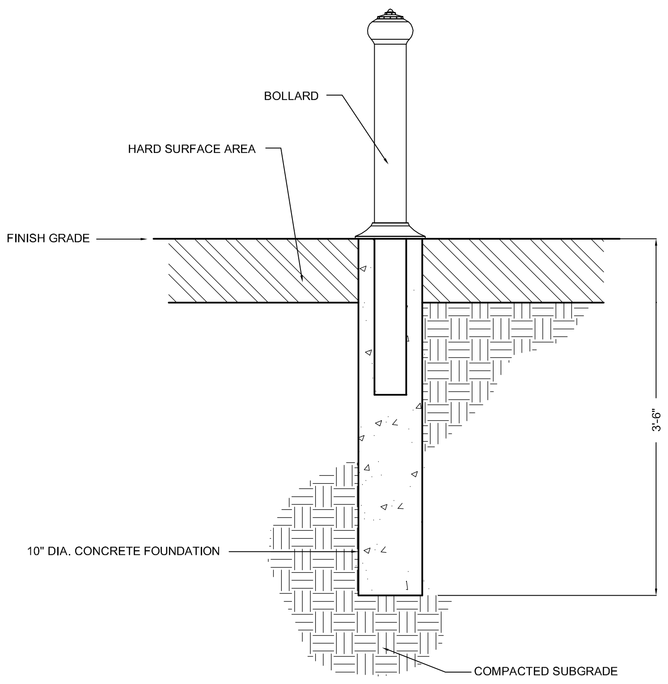

5. FIXED BOLLARD BASE

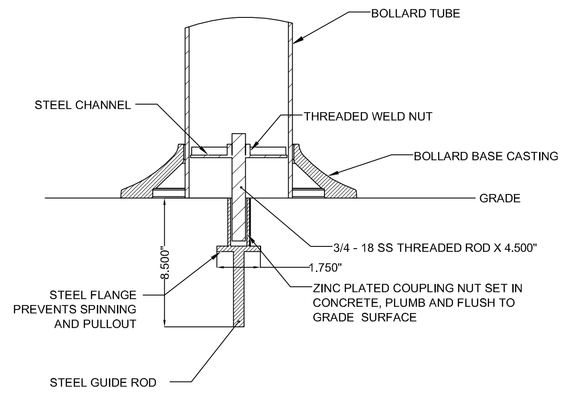

6. REMOVABLE BOLLARD BASE

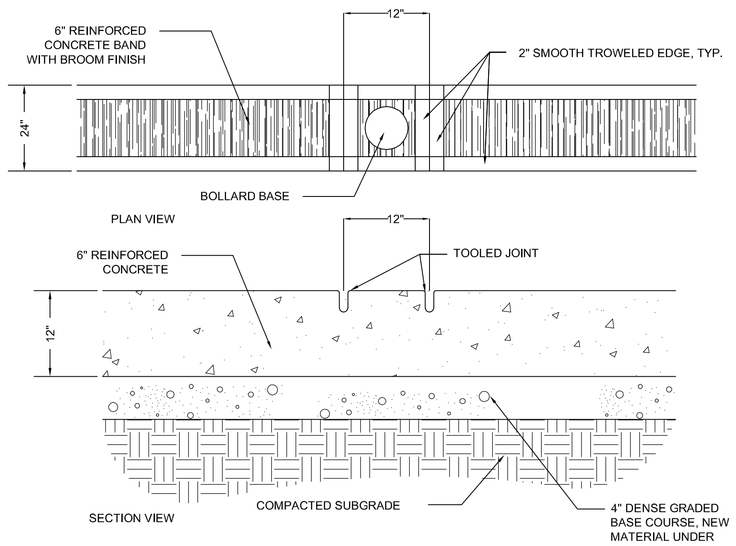

NOTE: TOOLED JOINTS SHALL BE SPACED NO MORE THAN 10'-0" O.C.

7. 24" CONCRETE BAND

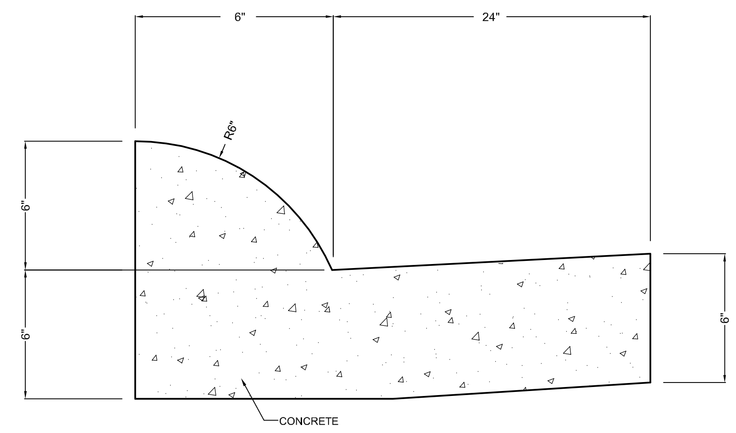

8. 30" MOUNTABLE CURB

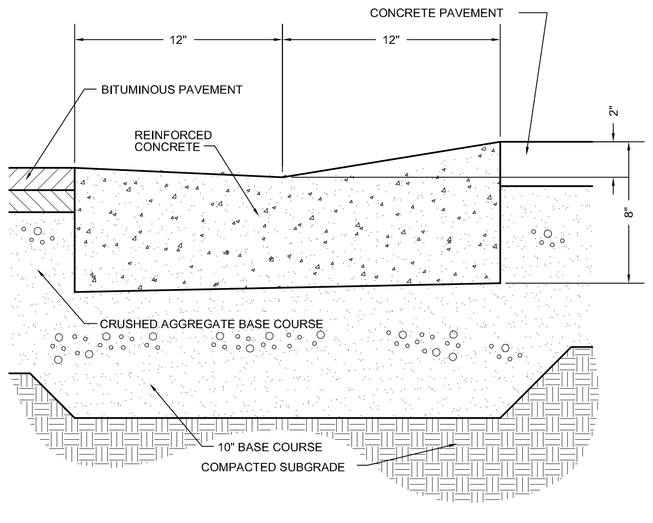

9. 24" FLOWLINE CURB

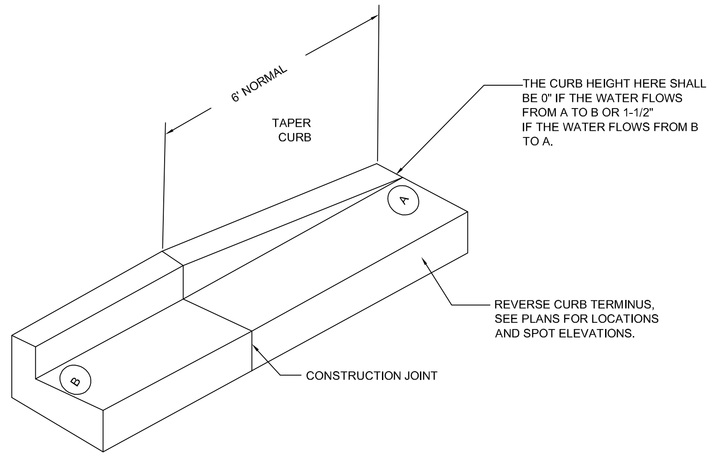

10. CURB TERMINUS

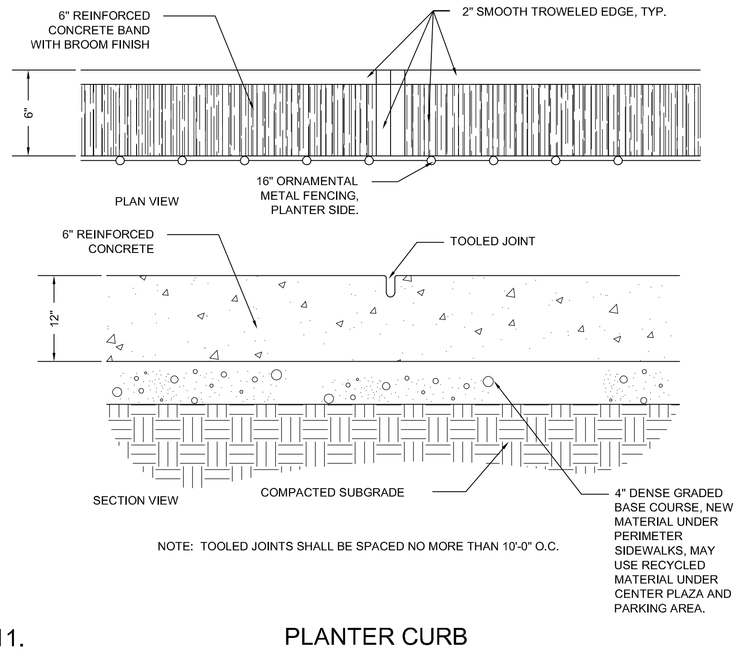

NOTE: TOOLED JOINTS SHALL BE SPACED NO MORE THAN 10'-0" O.C.

11. PLANTER CURB

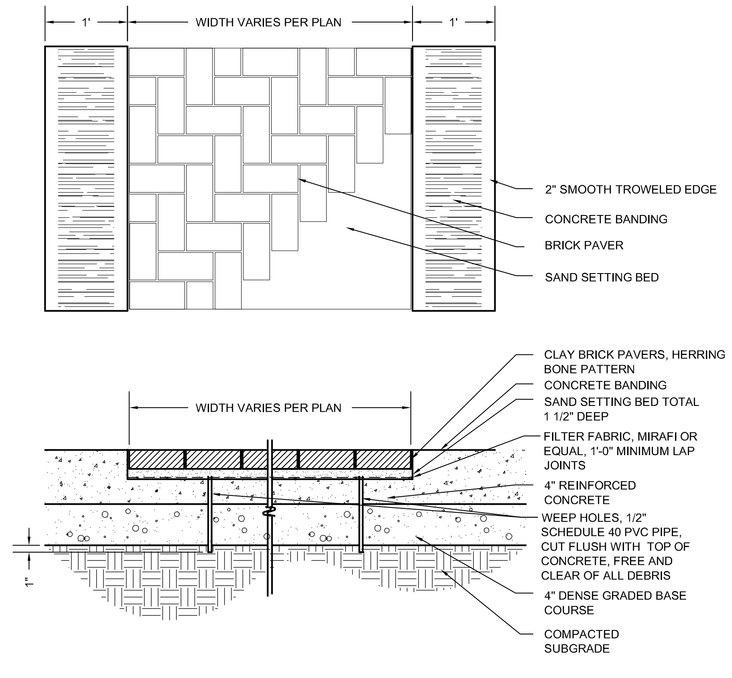

12. BRICK PAVERS AND BASE

REV	DATE	ISSUED FOR
	2/18/11	BID

DRAWN:	J. KNEER
CHECKED:	J. KNEER
DOCUMENT NO.	10.020

RETTLER corporation
3317 Business Park Drive, Stevens Point, WI 54481
Telephone: 715 - 341 - 2833; Fax: 715 - 341 - 0431
email: info @ rettler.com, website: www.rettler.com

SITE DETAILS

CITY OF STEVENS POINT
MATHIAS MITCHELL PUBLIC SQUARE
STEVENS POINT, WISCONSIN

C11.0

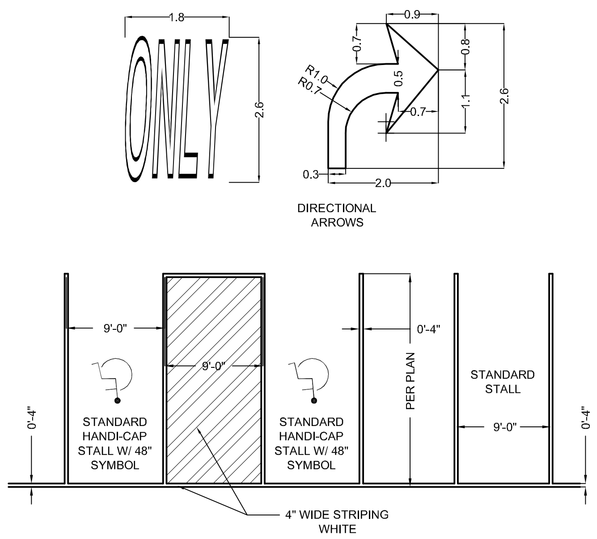

1. PAVEMENT STRIPING

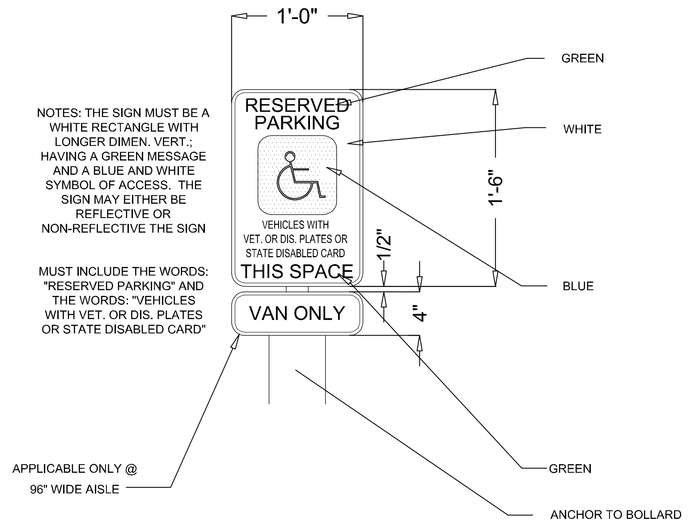

2. HANDICAP SIGNAGE

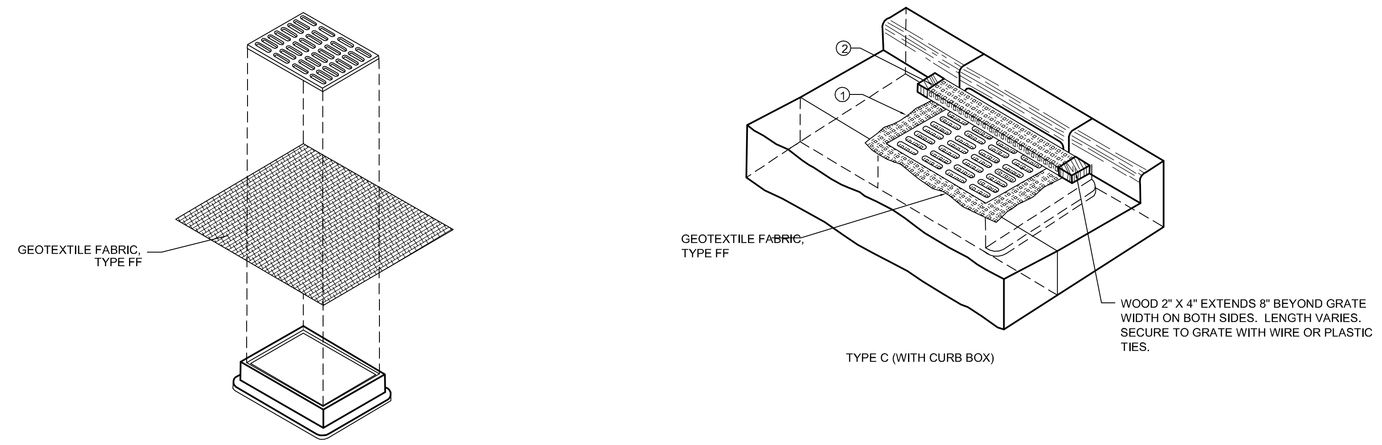

NOTES:
1. FABRIC SIZE SHALL BE 8" (MIN) GREATER ON ALL SIDES OF THE INLET COVER
2. TO PROVIDE A HAND HOLD WHEN MAINTENANCE OR REMOVAL IS REQUIRED.

NOTES (TYPE B AND C):
1. IF DEPTH IS MORE THAN 30" FROM INLET RIM TO CROWN OF PIPE, USE TYPE D INLET PROTECTION.
2. TRIM EXCESS FABRIC IN THE FLOW LINE TO WITHIN 3" OF THE GRATE.
3. THE CONTRACTOR SHALL DEMONSTRATE A METHOD OF MAINTENANCE, USING A SEWN FLAB, HAND HOLDS OR OTHER METHOD TO PREVENT ACCUMULATED SEDIMENT FROM ENTERING THE INLET.
4. FABRIC SIZE SHALL BE 200 mm (MIN) GREATER ON ALL SIDES OF THE INLET COVER TO PROVIDE A HAND HOLD WHEN MAINTENANCE OR REMOVAL IS REQUIRED.

3. INLET PROTECTION

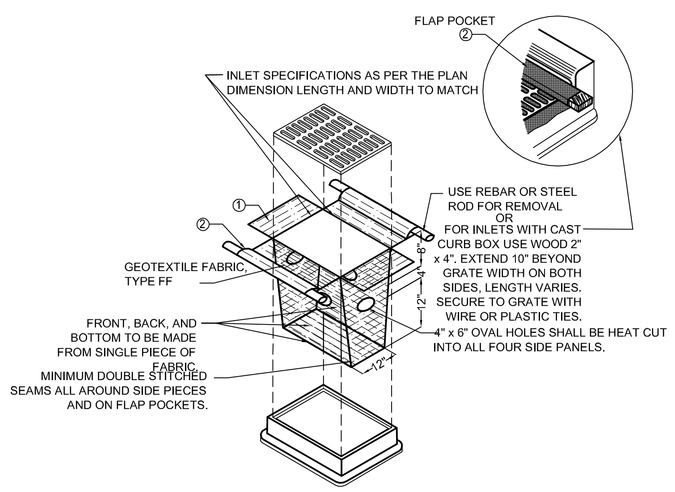

NOTES:
1. FABRIC SIZE SHALL BE 8" (MIN) GREATER ON ALL SIDES OF THE INLET COVER TO PROVIDE A HAND HOLD WHEN MAINTENANCE OR REMOVAL IS REQUIRED.
2. FLAP POCKETS SHALL BE LARGE ENOUGH TO ACCEPT WOOD 2X4.

4. TYPE "D" INLET PROTECTION / INLET FILTER

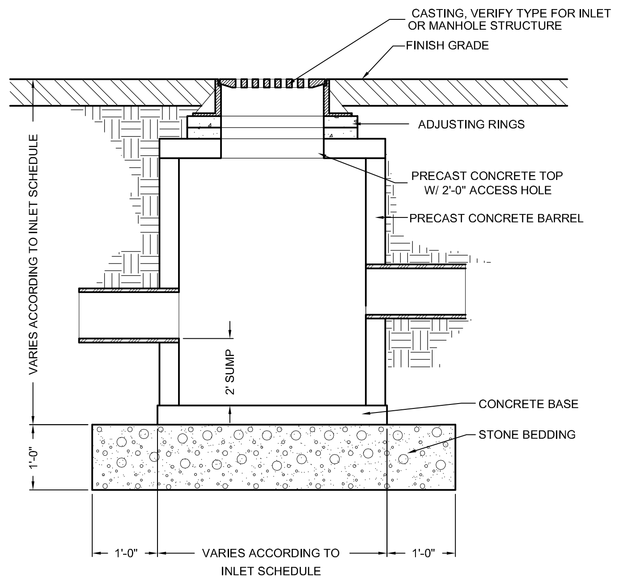

NOTE: - SEE UTILITY PLAN FOR GRATE AND OUTLET PIPE ELEVATIONS
- SEE MANUFACTURER'S SPECIFICATIONS FOR PROPER BASIN INSTALLATION
- ALL CONCRETE BASINS SHALL HAVE A 2' SUMP

5. CONCRETE STORM BASIN

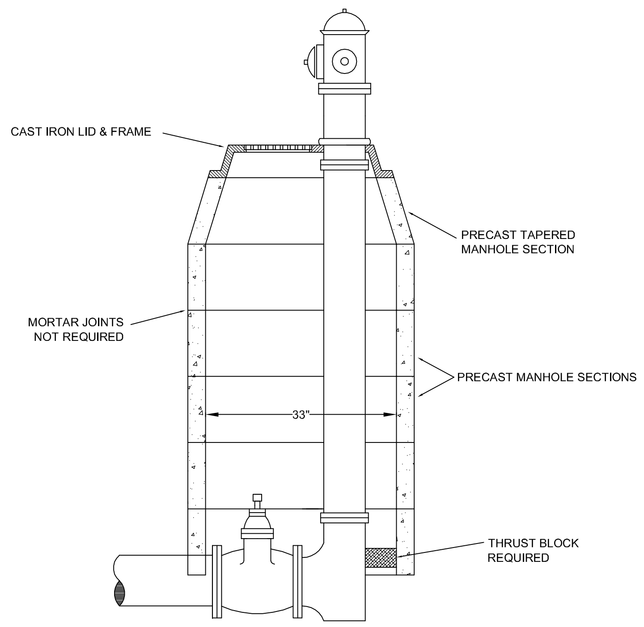

6. FIRE HYDRANT (BY OWNER)

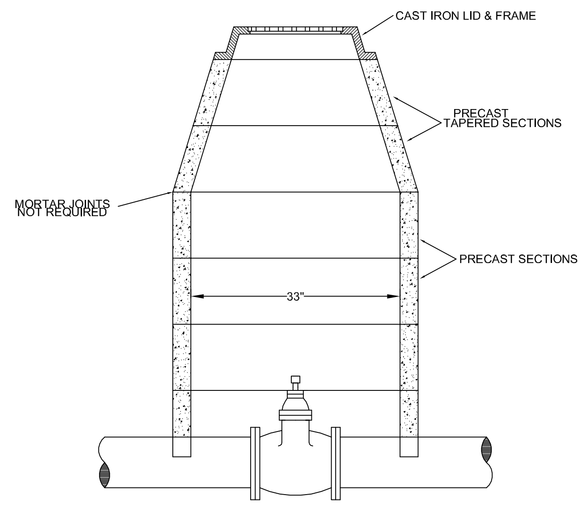

7. WATER VALVE AND BOX (BY OWNER)

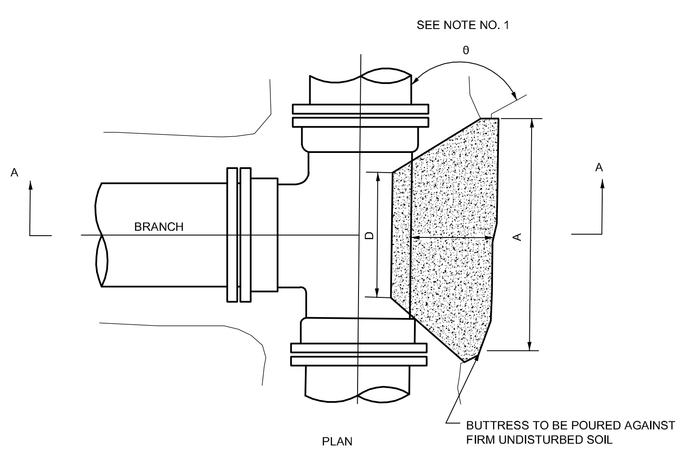

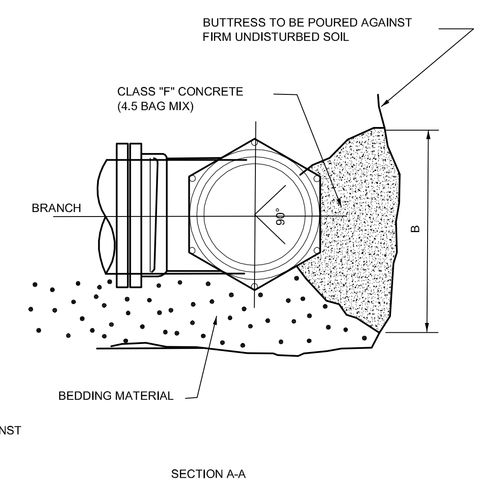

NOTES:

1. DIMENSION "C" SHOULD BE LARGE ENOUGH TO MAKE ANGLE 0 EQUAL TO OR LARGER THAN 45°.
2. CONCRETE SHOULD BEAR ON THIS QUADRANT OF PIPE AS A MINIMUM.
3. DIMENSION "D" SHOULD BE AS LARGE AS POSSIBLE BUT CONCRETE SHOULD NOT INTERFERE WITH MECHANICAL JOINTS.
4. BUTTRESS DIMENSIONS ARE BASED ON A SOIL RESISTANCE OF 2 TONS PER SQ. FT. AND A WATER PRESSURE OF 150 PSI.

BUTTRESS DIMENSIONS

B.D.	A	B	C	D
6"	1'-3"	1'-0"		
8"	1'-6"	1'-4"		
12"	2'-3"	2'-0"		
16"	3'-2"	2'-6"	SEE NOTE NO. 1	SEE NOTE NO. 3
20"	4'-0"	3'-0"		
24"	5'-3"	3'-4"		
30"	6'-3"	4'-3"		

B.D.=BRANCH DIAMETER

8. BUTTRESS FOR TEES

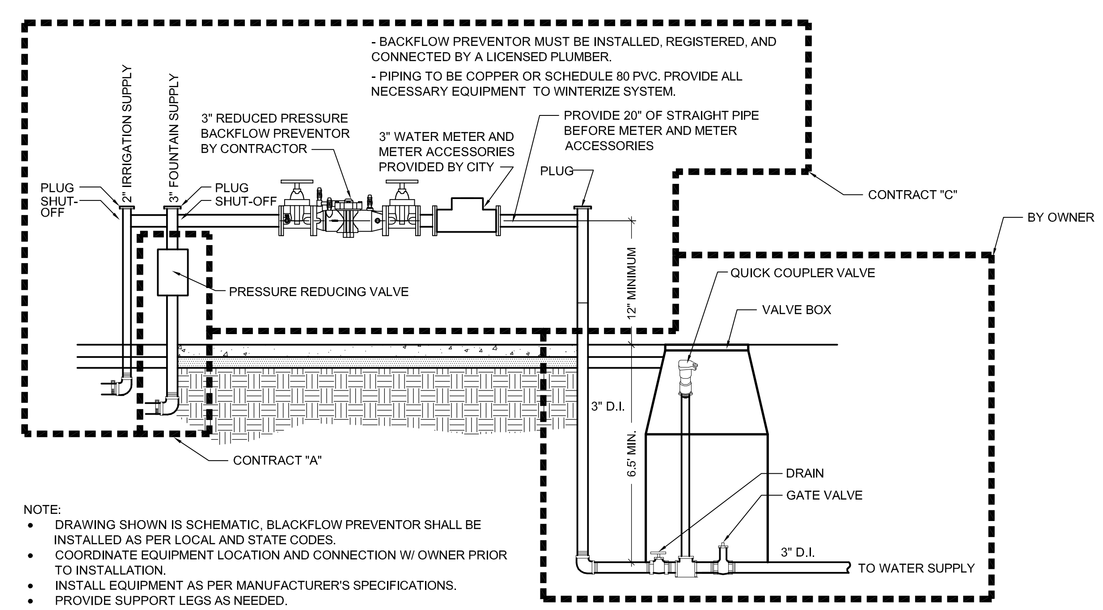

NOTE:
- DRAWING SHOWN IS SCHEMATIC, BLACKFLOW PREVENTOR SHALL BE INSTALLED AS PER LOCAL AND STATE CODES.
- COORDINATE EQUIPMENT LOCATION AND CONNECTION W/ OWNER PRIOR TO INSTALLATION.
- INSTALL EQUIPMENT AS PER MANUFACTURER'S SPECIFICATIONS.
- PROVIDE SUPPORT LEGS AS NEEDED.

9. IRRIGATION AND FOUNTAIN WATER SUPPLY

REV	DATE	ISSUED FOR
	2/18/11	BID

DRAWN: J. KNEER
CHECKED: J. KNEER
DOCUMENT NO. 10.020

RETTLER corporation
3317 Business Park Drive, Stevens Point, WI 54481
Telephone: 715 - 341 - 2833; Fax: 715 - 341 - 0431
email: info @ rettler.com, website: www.rettler.com

SITE DETAILS

CITY OF STEVENS POINT
MATHIAS MITCHELL PUBLIC SQUARE
STEVENS POINT, WISCONSIN

C11.1

NOTES:

1. DIMENSION "C" SHOULD BE LARGE ENOUGH TO MAKE ANGLE θ EQUAL TO OR LARGER THAN 45°.
2. DIMENSION "B" EQUALS APPROX. I.D. OF PIPE LESS 2". AN EFFORT SHOULD BE MADE TO PREVENT THE CONCRETE FROM COVERING THE M.J. BOLTS.
3. WHERE BUTTRESSES ARE NOT POSSIBLE BECAUSE OF POOR SOIL CONDITIONS OR LACK OF ROOM, STRAPPING SHALL BE PERMITTED.
4. BUTTRESS DIMENSIONS ARE BASED ON A SOIL RESISTANCE OF 2 TONS PER SQ. FT. AND A WATER PRESSURE OF 150 PSI.

BUTTRESS DIMENSIONS				
DIA.	A	B	C	D
6"	1'-6"	1'-2"		
8"	2'-0"	1'-4"		
12"	2'-5"	1'-10"	SEE NOTE NO. 1	SEE NOTE NO. 2
16"	3'-4"	2'-4"		
20"	4'-3"	2'-10"		
24"	5'-2"	3'-4"		
30"	6'-9"	4'-0"		

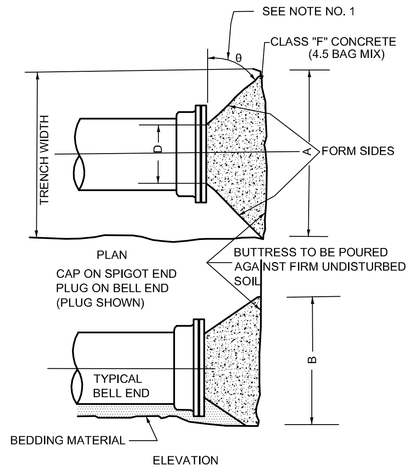

1. BUTTRESS FOR DEAD ENDS

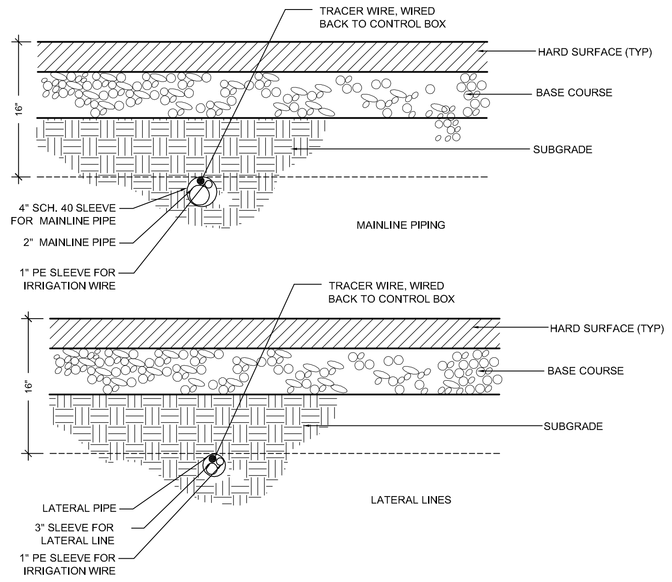

2. IRRIGATION SLEEVING

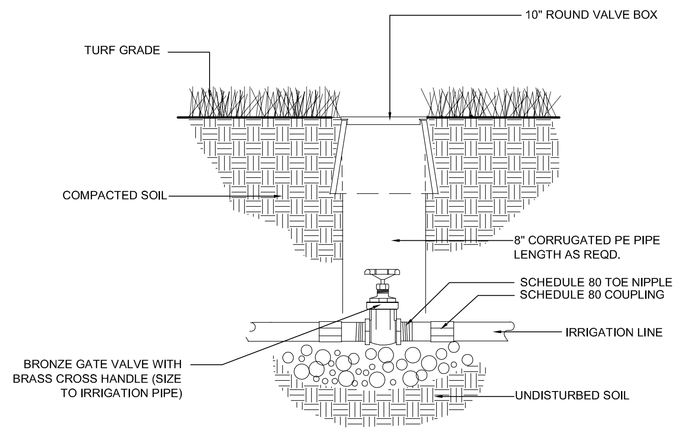

3. ISOLATION VALVE

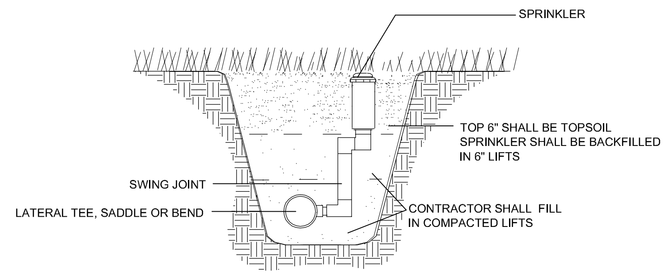

4. SPRINKLER INSTALLATION

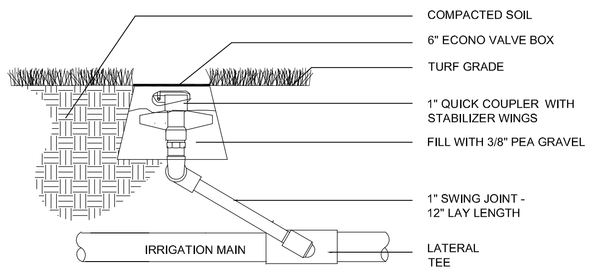

5. QUICK COUPLER

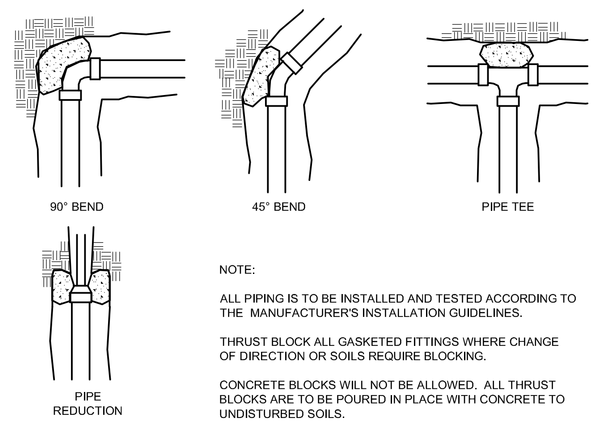

NOTE:

ALL PIPING IS TO BE INSTALLED AND TESTED ACCORDING TO THE MANUFACTURER'S INSTALLATION GUIDELINES.

THRUST BLOCK ALL GASKETED FITTINGS WHERE CHANGE OF DIRECTION OR SOILS REQUIRE BLOCKING.

CONCRETE BLOCKS WILL NOT BE ALLOWED. ALL THRUST BLOCKS ARE TO BE POURED IN PLACE WITH CONCRETE TO UNDISTURBED SOILS.

6. IRRIGATION THRUST BLOCKING

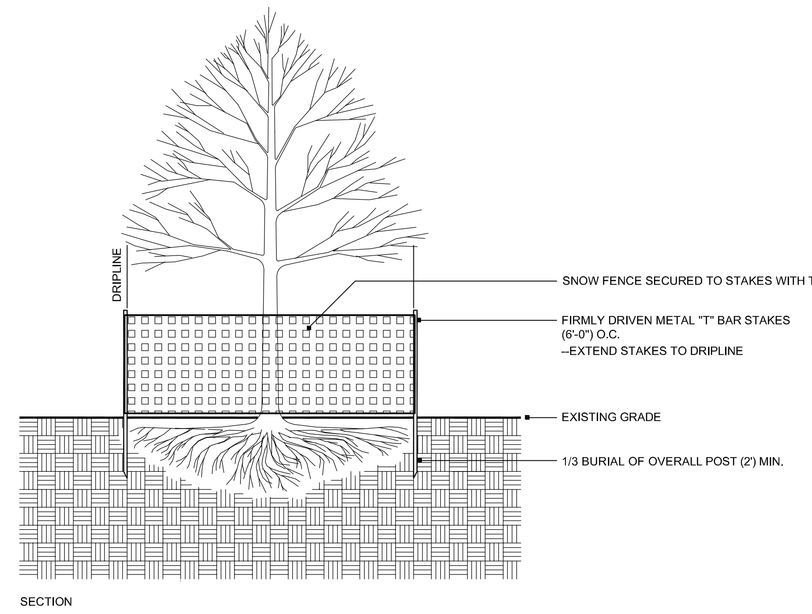

7. TREE PROTECTION

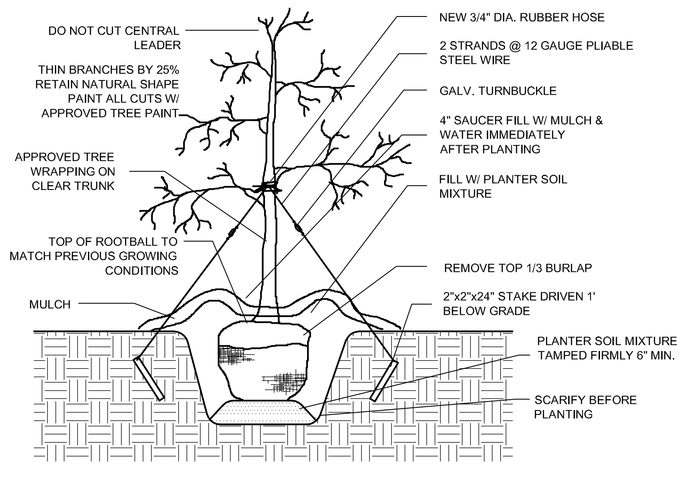

* TREES OF SAME SPECIES TO BE MATCHED IN GROWTH AND UNIFORMITY
* PLANTING HOLE WIDTH SHALL BE THREE TIMES THE SIZE OF ROOTBALL.

8. TREES UNDER 2" CALIPER

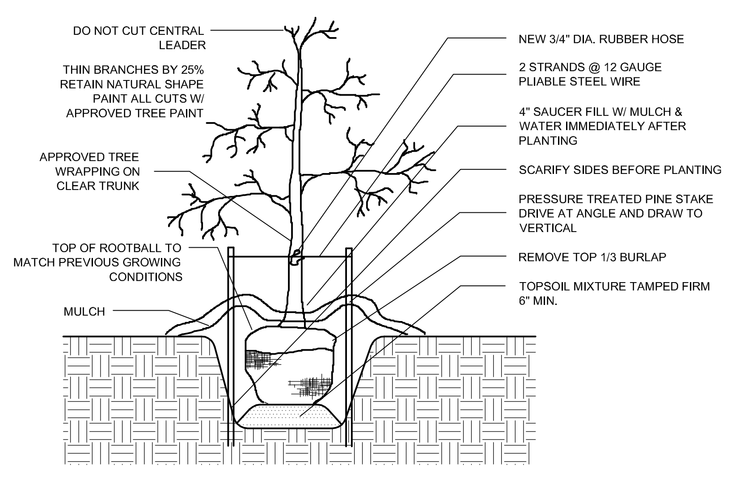

* PLANTING HOLE WIDTH SHALL BE THREE TIMES THE SIZE OF ROOTBALL
* ONLY PRUNE BROKEN OR INJURED BRANCHES
* TREES OR SAME SPECIES TO BE MATCHED IN GROWTH AND UNIFORMITY

9. TREES OVER 2" CALIPER

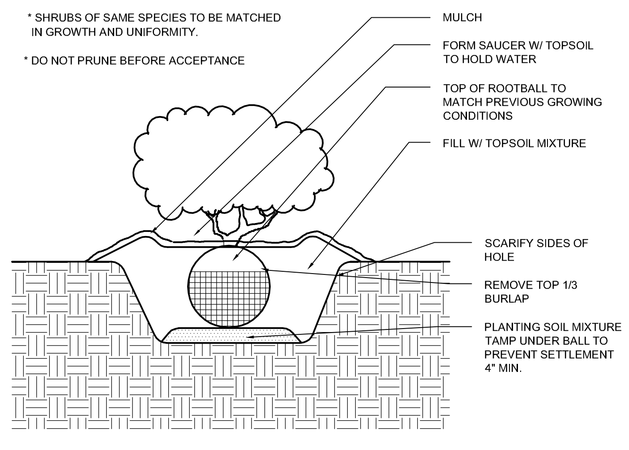

10. SHRUB PLANTING DETAIL

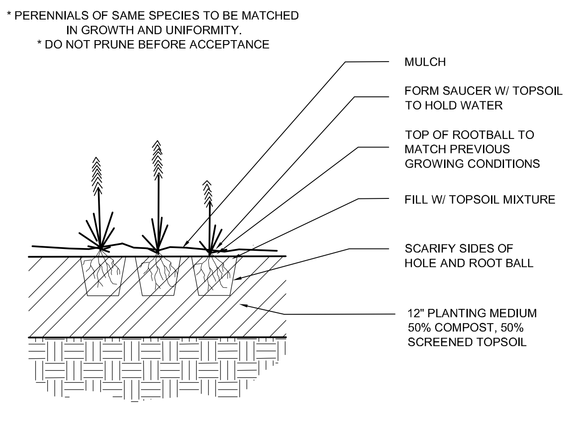

11. PERENNIAL PLANTING DETAIL

REV	DATE	ISSUED FOR
	2/18/11	BID

DRAWN: J. KNEER
CHECKED: J. KNEER
DOCUMENT NO. 10.020

RETTLER corporation
3317 Business Park Drive, Stevens Point, WI 54481
Telephone: 715 - 341 - 2833; Fax: 715 - 341 - 0431
email: info @ rettler.com, website: www.rettler.com

SITE DETAILS

CITY OF STEVENS POINT
MATHIAS MITCHELL PUBLIC SQUARE
STEVENS POINT, WISCONSIN

C11.2

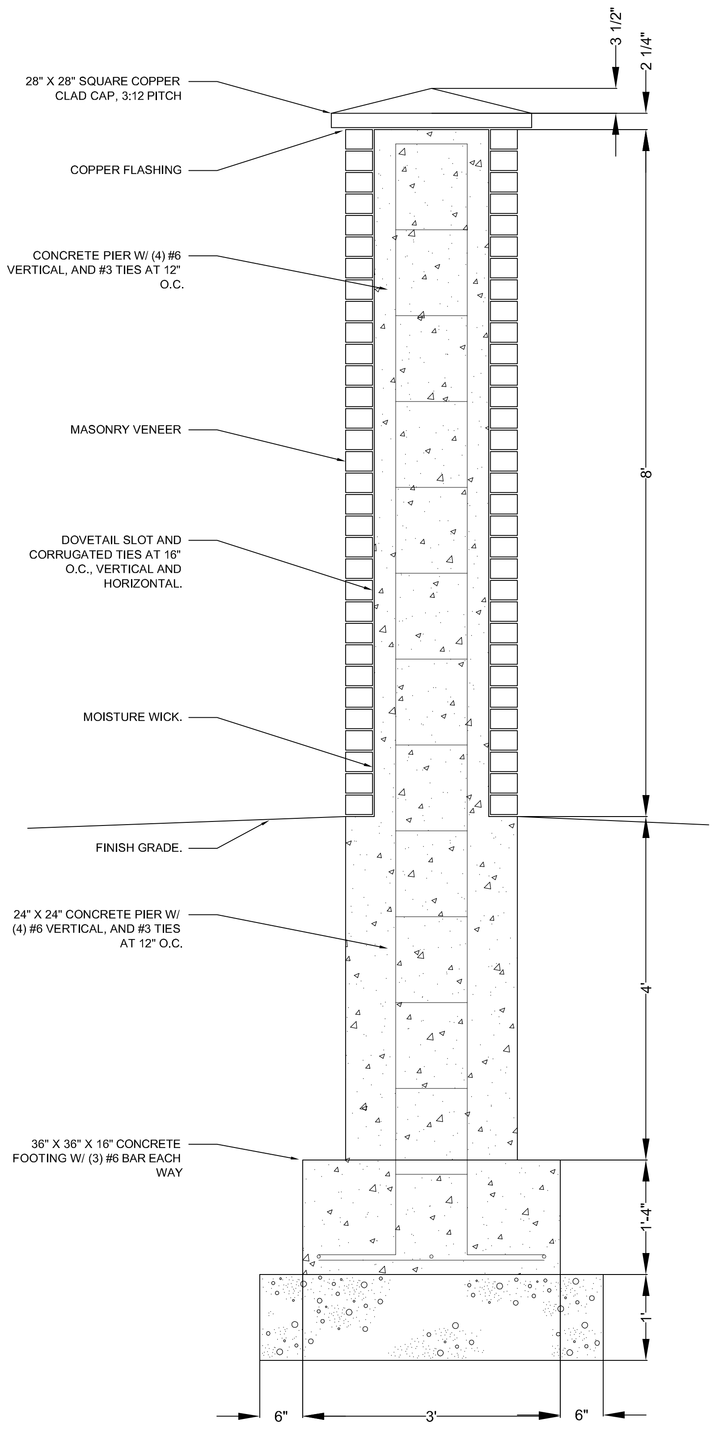

1. BRICK PIER DETAIL

R-4996 SELF-FORMING TRENCH INSTALLATION INSTRUCTIONS

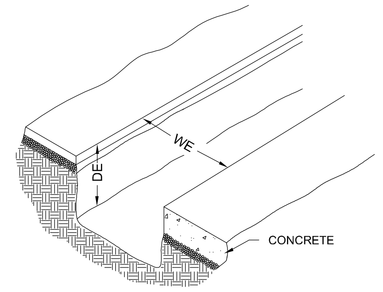

INSTALLATION INSTRUCTIONS.
FOR EXISTING PAVEMENT SELECT PROPER WIDTH OF EXCAVATION (WE) AND DEPTH OF EXCAVATION (DE) TO PROVIDE ADEQUATE ROOM TO INSTALL FRAME AND PLACE CONCRETE. CUT PAVEMENT AND EXCAVATE.

MEASURE AND CUT ALL THREAD ROD, REQUIRED TO SUPPORT AND CONTROL THE FRAME PLACEMENT. INSERT THREADED ROD THROUGH THE HOLES IN THE BOTTOM OF THE FRAME PIECES. APPLY A NUT TO EACH ROD ON THE UNDERSIDE OF THE FRAMES. THE THREADS SHOULD NOT EXTEND PAST THE NUT, FOR EASY REMOVAL OF ROD AFTER CONCRETE IS POURED.

NAIL CROSSBAR SUPPORT TO 2 X 4 SUPPORT BLOCKS. DRILL HOLES IN CENTER OF CROSSBAR SUPPORT AND PLACE OVER THE TOP OF THE THREADED ROD. PLACE A WASHER AND NUT ON THE TOP END OF THE ASSEMBLY. REPEAT THIS PROCEDURE ON ALL TRENCH FRAME PIECES.

SET 1ST ASSEMBLY IN THE TRENCH, WITH CROSSBARS SUPPORTED BY 2 X 4 BLOCKS ON EACH END. SET 2ND ASSEMBLY IN THE TRENCH, POSITIONING IT ON THE CONTROL TABS OF THE PREVIOUS FRAME. FRAMES SHOULD BUTT TOGETHER CLOSELY, WITH AS LITTLE GAP AS POSSIBLE.

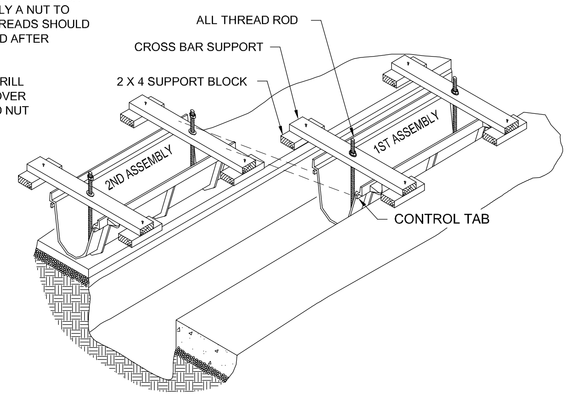

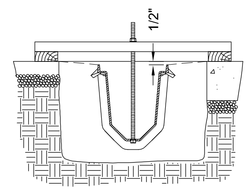

USING THIS SUGGESTED FORMING PROCEDURE AND STANDARD MATERIALS, A 1/2" DEPRESSION FOR IMPROVED DRAINAGE IS ASSURED.

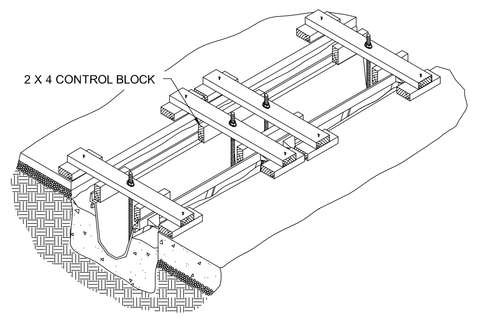

PLACE 2 X 4 CONTROL BLOCKS ACROSS THE JOINTS BETWEEN THE 1ST ASSEMBLY AND THE 2ND ASSEMBLY. TIGHTEN THE NUTS ON TOP OF THE CROSSBAR SUPPORTS TO LOCK THE JOINTS BETWEEN THE ASSEMBLIES.

POUR CONCRETE PART WAY UP ON THE FRAME AND ALLOW IT TO CURE.

REMOVE ALL SUPPORTS AND THREADED RODS. FILL REMAINING VOID WITH CONCRETE AND FINISH.

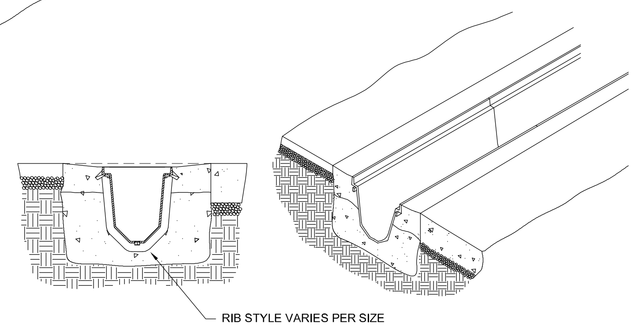

2. TRENCH DRAIN INSTALLATION

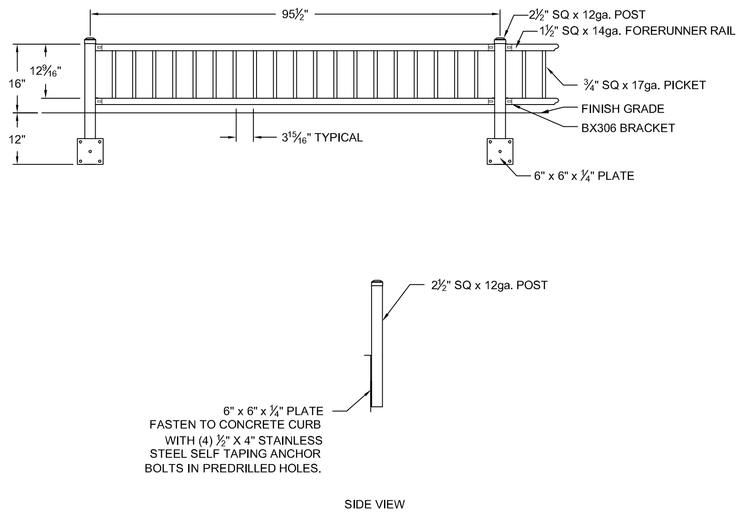

3. 16" ORNAMENTAL METAL FENCE

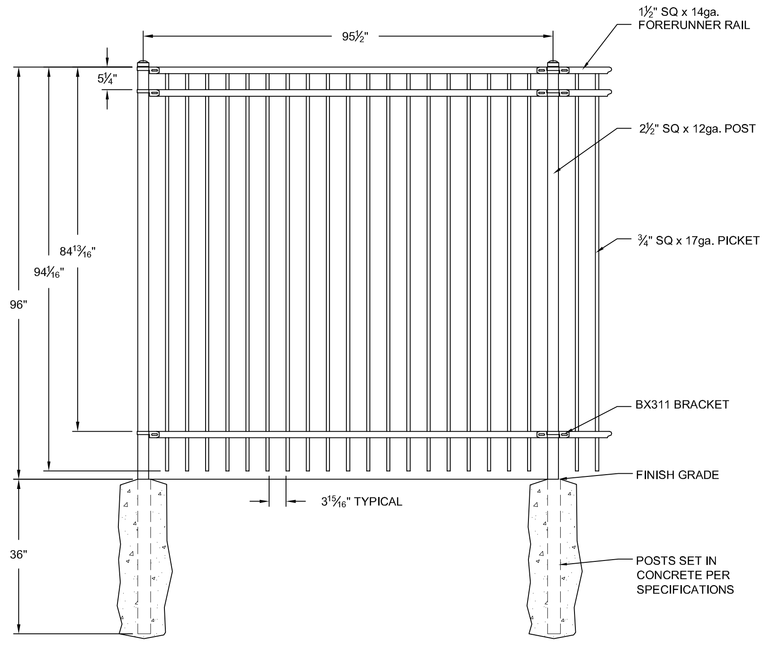

4. 8' ORNAMENTAL METAL FENCE

R-8500 FRAMES-FORMING PROCEDURE

NOTE: FAILURE TO FOLLOW THESE FORMING PROCEDURES COULD RESULT IN AN UNSATISFACTORY INSTALLATION.

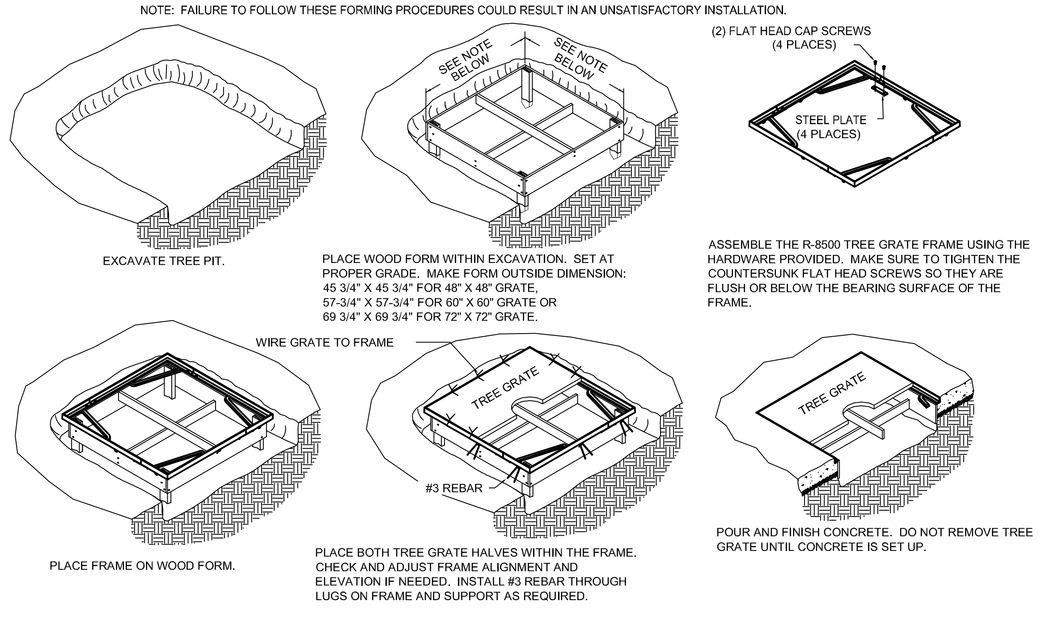

EXCAVATE TREE PIT.

PLACE WOOD FORM WITHIN EXCAVATION. SET AT PROPER GRADE. MAKE FORM OUTSIDE DIMENSION:
45 3/4" X 45 3/4" FOR 48" X 48" GRATE,
57-3/4" X 57-3/4" FOR 60" X 60" GRATE OR
69 3/4" X 69 3/4" FOR 72" X 72" GRATE.

ASSEMBLE THE R-8500 TREE GRATE FRAME USING THE HARDWARE PROVIDED. MAKE SURE TO TIGHTEN THE COUNTERSUNK FLAT HEAD SCREWS SO THEY ARE FLUSH OR BELOW THE BEARING SURFACE OF THE FRAME.

PLACE FRAME ON WOOD FORM.

PLACE BOTH TREE GRATE HALVES WITHIN THE FRAME. CHECK AND ADJUST FRAME ALIGNMENT AND ELEVATION IF NEEDED. INSTALL #3 REBAR THROUGH LUGS ON FRAME AND SUPPORT AS REQUIRED.

POUR AND FINISH CONCRETE. DO NOT REMOVE TREE GRATE UNTIL CONCRETE IS SET UP.

5. TREE GRATE INSTALLATION

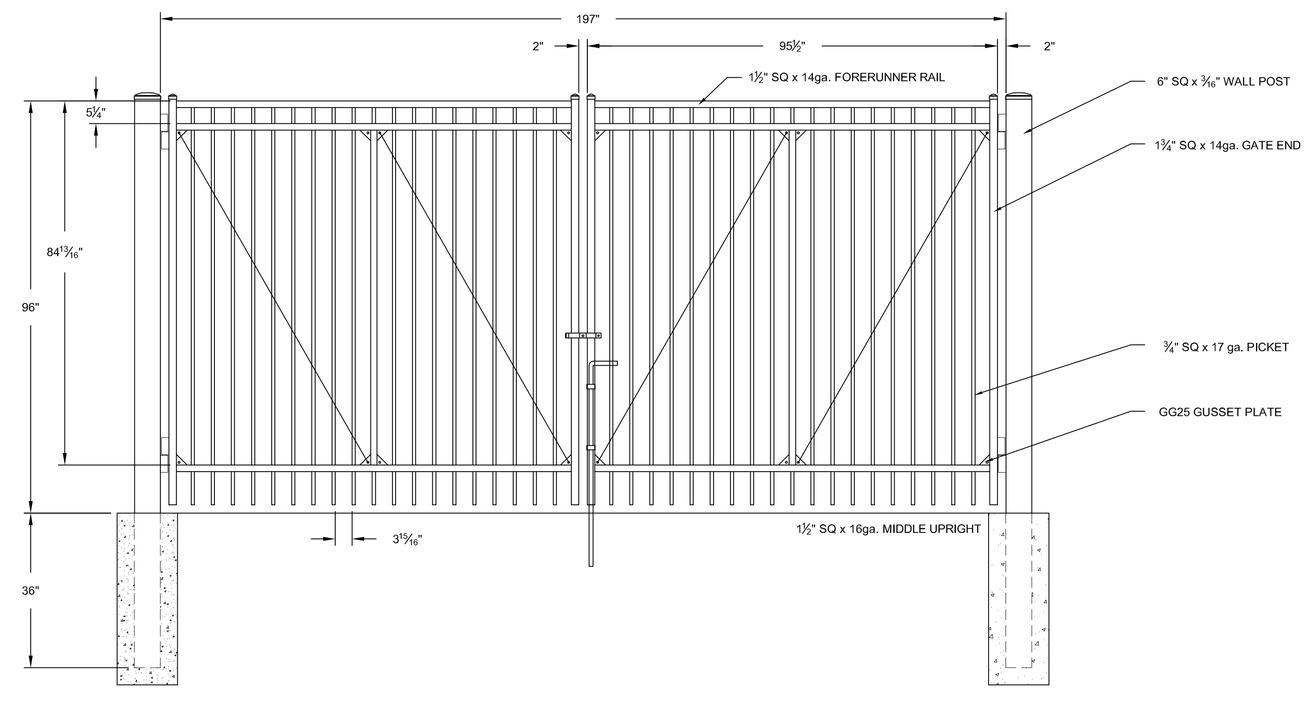

6. 8' X 8' ORNAMENTAL METAL FENCE GATE

REV	DATE	ISSUED FOR
	2/18/11	BID

DRAWN:	J. KNEER
CHECKED:	J. KNEER
DOCUMENT NO.	10.020

RETTLER corporation
3317 Business Park Drive, Stevens Point, WI 54481
Telephone: 715 - 341 - 2833; Fax: 715 - 341 - 0431
email: info @ rettler.com, website: www.rettler.com

SITE DETAILS

CITY OF STEVENS POINT
MATHIAS MITCHELL PUBLIC SQUARE
STEVENS POINT, WISCONSIN

C11.3

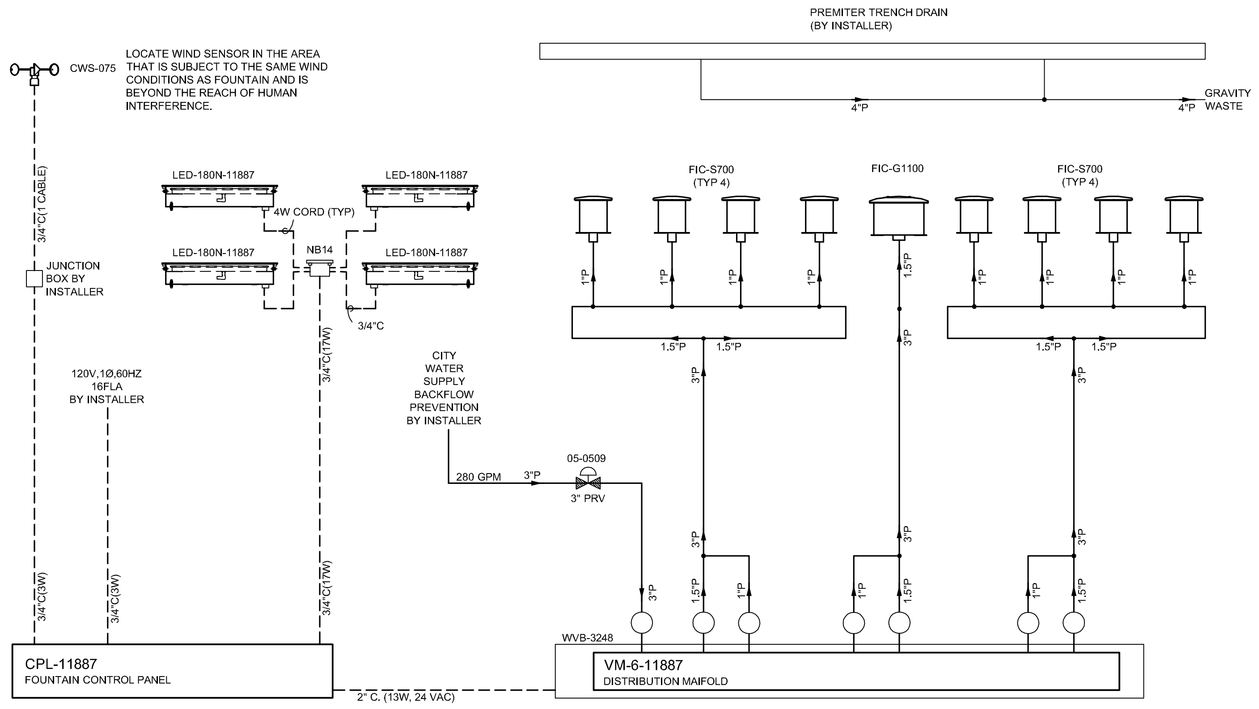

ELECTRICAL WIRING NOTE :
ALL MATERIALS AND LABOR REQUIRED TO COMPLETE FIELD WIRING WITH WIRE TERMINATIONS FOR INCOMING POWER AND WIRING ASSOCIATED WITH WIND SYSTEMS, FOUNTAIN LIGHTING, ARE TO BE ACCOMPLISHED BY INSTALLING CONTRACTOR AND MUST BE COMPLETED AND TESTED PRIOR TO A SCHEDULED ON-SITE STARTUP BY A FACTORY TECHNICIAN. SIZE LIGHTING WIRE FOR MAXIMUM 5% VOLTAGE DROP WITH 27 WATTS AT 14 VDC.

NOTES:
1. THIS DRAWING IS DIAGRAMMATIC IN NATURE.
2. PIPE AND CONDUIT (BY INSTALLER) IS SHOWN TO DEPICT QUANTITY AND SIZE ONLY.
3. THIS SYSTEM IS DESIGNED FOR 100 FT MAXIMUM PIPING DISTANCE FROM VALVE BOX TO FOUNTAIN. INSTALL PIPE RUNS AS DIRECT AS POSSIBLE USING A MINIMUM NUMBER OF FITTINGS. SLOPE PIPE TO VALVE BOX FOR DRAINAGE AND FREE OF AIR TRAPS OR LOOPS.

1.

STEVENS POINT DOWNTOWN SQUARE FTN. FIELD CONNECTIONS				
DR. DAVID	P11887PD01	ASSN. PMM	PROJ. NONE	DATE 12 - 20 - 10

FOUNTAIN PEOPLE, INC. • PO BOX 807 • SAN MARCOS, TX 78667 • 512-392-1155

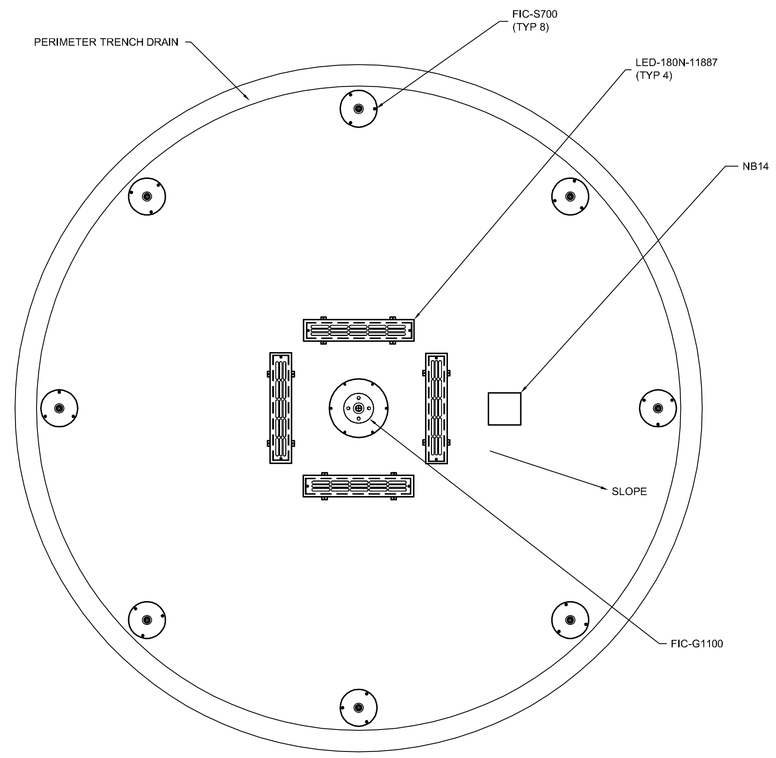

NOTES:
1. THIS DRAWING IS DIAGRAMMATIC IN NATURE.
2. LOCATIONS RECOMMENDED FOR COMPONENTS ARE APPROXIMATE.

2.

STEVENS POINT DOWNTOWN SQUARE FTN. PLAN VIEW				
DR. DAVID	G11887GA01	ASSN.	PROJ. 3/4"=1'	DATE 12 - 20 - 10

FOUNTAIN PEOPLE, INC. • PO BOX 807 • SAN MARCOS, TX 78667 • 512-392-1155

NOT ALL SYMBOLS ARE USED ON EVERY PROJECT

BASIC DRAWING NOTATIONS
ALL SIZES ARE INCHES UNLESS SPECIFIED OTHERWIDE

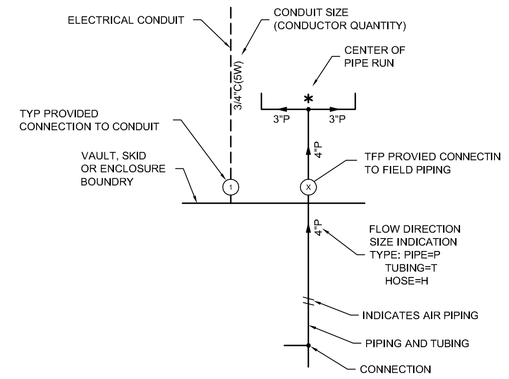

NOTES:
1. THESE DRAWINGS ARE DIAGRAMMATIC IN NATURE. REFER TO THE PROJECT PLANS AND SPECIFICATIONS FOR MORE COMPLETE DETAILS.
2. PIPE, FITTINGS, CONDUIT, WIRE, AND TUBING SHALL BE SUPPLIED BY THE CONTRACTOR.
3. CONDUIT LOCATED WITHIN THE POOL BASIN AND STUB-UPS THROUGH POOL FLOOR OF WALLS INTO THE BASIN SHALL BE RED BRASS.
4. INSTALL ONLY STRANDED TYPE COPPER CONDUCTORS WITH WATERPROOF INSULATION BETWEEN UNDERWATER JUNCTION BOXES AND FOUNTAIN CONTROL PANEL. SOLID COPPER CONDUCTORS SHALL NOT BE PERMITTED. CONTRACTOR SHALL SIZE WIRE BASED UPON CONDUIT RUNS AND CODE REQUIREMENTS.
5. REFER TO WIRING DIAGRAMS FOR CONDUCTOR QUANTITY AND CONNECTION INFORMATION.
6. UNDERWATER JUNCTION BOXES LOCATED INSIDE OR OUT OF THE FOUNTAIN BASIN AND BELOW WATER LEVEL, SHALL BE TOTALLY ENCAPSULATED IN AN APPROVED POTTING COMPOUND.
7. MAKE PIPING SLOPE TO THE PUMP FOR DRAINAGE. IF PIPING CANNOT BE SLOPED TO PUMP, MAKE PROVISIONS FOR COMPLETE DRAINING OF EACH PIPE LINE CONNECTING MINIMUM A 1-1/2" DRAIN LINE AND VALVE TO LOWEST POINT IN PIPE RUN.
8. MAKE PIPE RUNS AS DIRECT AS POSSIBLE USING A MINIMUM NUMBER OF FITTINGS. INSTALL PIPING STRAIGHT AND TRUE WITHOUT LOOPS OR TRAPS.
9. PUMP SUCTION PIPING SHALL BE A STRAIGHT RUN INTO THE PUMP FREE OF PIPE BENDS OR TEES FOR A MINIMUM OF TEN PIPE DIAMETERS PRECEDING THE PUMP'S SUCTION CONNECTION UNLESS OTHERWISE INDICATED ON THE DRAWINGS.

3.

FIELD CONNECTIONS SYMBOLS LEGEND				
DR. DAVID	SYMBOLS LEGEND	ASSN.	PROJ. NONE	DATE 00 - 00 - 00

FOUNTAIN PEOPLE, INC. • PO BOX 807 • SAN MARCOS, TX 78667 • 512-392-1155

INSTALLATION INSTRUCTIONS.

Valve Box/Pedestall Installation Instructions (Without Pedestal)
Excavation
select the valve box site with run-off and flooding in mind. the site should have good drainage. prepare a 4' deep excavation of sufficient dimension to accommodate the valve box. fill the bottom of the excavation with gravel or crushed stone, ¾" maximum size with less than 5% fines deep enough to accommodate local water run-off. compact and level the gravel bed to support valve box.

Excavate Trenches
Select the number, size, and direction of trenches for plumbing and electrical lines. Install pipe and conduit.

Installing the Valve Manifold
Set manifold into the excavation and make connections as shown on the schematic. Take care to keep dirt and debris from entering open piping.

Installing the Valve Box
Set valve box over manifold taking care to allow adequate access clearance. Level the Valve Box and verify elevation relative to water run-off conditions.
Connect the 2" conduit from the valve box to the Controller or intermediate junction box.

Wiring the Valve Box
Route solenoid valve cord through the wiring gutter and pull through the 2" conduit to the Controller. Make connections inside of the Controller as shown on the electrical drawings contained in the Controller or intermediate junction box. Test valves before backfilling.

Back Fill Trenches
Back fill trenches after system has been tested.

Backfilling Valve Box
Back fill Valve Box with enough gravel to allow adequate drainage of water. Local conditions must be reflected in type of backfilling. Gravel is recommended.

For any questions concerning these installation instructions, please contact the Fountain People Field Service Department, 8:00 AM to 5:00 PM, Monday through Friday at (512) 392-1155.

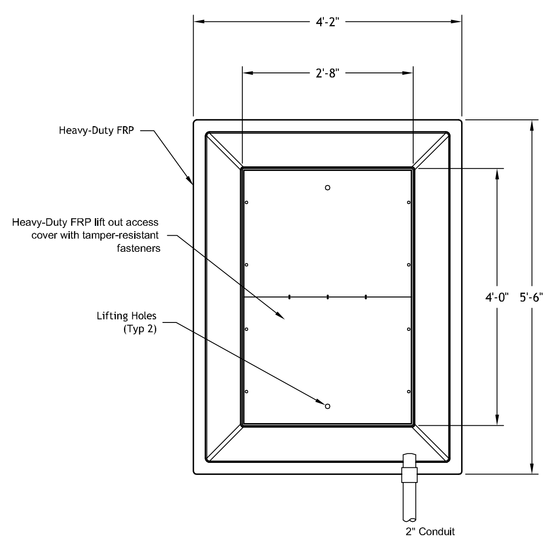

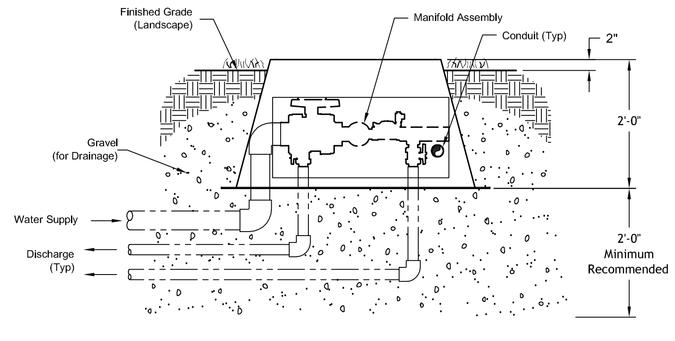

4.

VALVE BOX DETAIL				
DR. DAVID	WVB-3248	ASSN.	SCALE 3/4"=1'	DATE 12 - 20 - 10

FOUNTAIN PEOPLE, INC. • PO BOX 807 • SAN MARCOS, TX 78667 • 512-392-1155

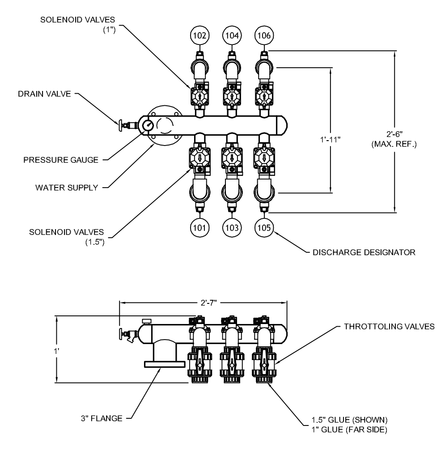

VM-6-11887
DISTRIBUTION MANIFOLD

5.

MANIFOLD DETAIL				
DR. DAVID	VM-6-11887	ASSN.	SCALE 1"=1'	DATE 12 - 20 - 10

FOUNTAIN PEOPLE, INC. • PO BOX 807 • SAN MARCOS, TX 78667 • 512-392-1155

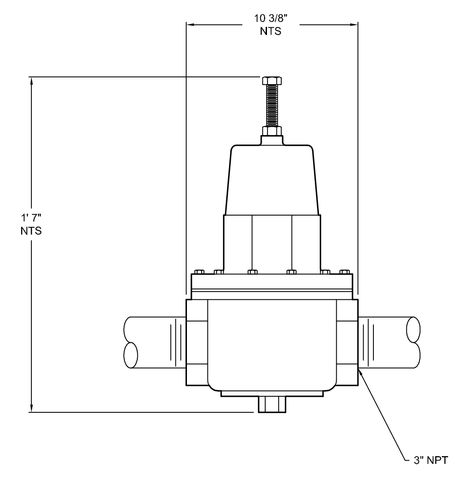

05-0509
PRESSURE REDUCING VALVE

6.

VALVE DETAIL				
DR. DAVID	05-0509	ASSN.	SCALE 1=4	DATE 12 - 20 - 10

FOUNTAIN PEOPLE, INC. • PO BOX 807 • SAN MARCOS, TX 78667 • 512-392-1155

REV	DATE	ISSUED FOR
	2/18/11	BID

DRAWN:	J. KNEER
CHECKED:	WS
DOCUMENT NO.	10.020

RETTLER corporation
3317 Business Park Drive, Stevens Point, WI 54481
Telephone: 715 - 341 - 2833; Fax: 715 - 341 - 0431
email: info @ rettler.com, website: www.rettler.com

FOUNTAIN PEOPLE

FOUNTAIN DETAILS

CITY OF STEVENS POINT
MATHIAS MITCHELL PUBLIC SQUARE
STEVENS POINT, WISCONSIN

C11.4

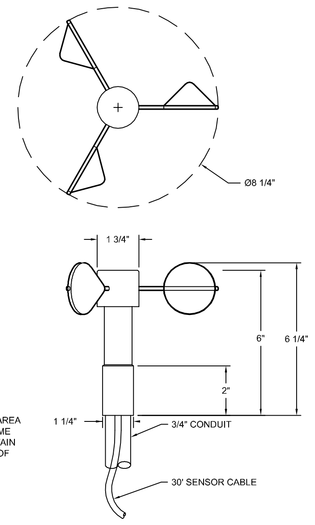

NOTES:
1. CONDUIT BY INSTALLER
2. LOCATE WIND SENSOR IN AREA THAT IS SUBJECT TO THE SAME WIND CONDITIONS AS FOUNTAIN AND IS BEYOND THE REACH OF HUMAN INTERFERENCE

CWS-075
WIND SPEED SENSOR (ANEMOMETER)

1.

SENSOR DETAIL					CWS-075
DWG. CWS-075	ASSY.	SCALE 1=2	DATE 00 - 00 - 00		

FOUNTAIN PEOPLE, INC. • PO BOX 807 • SAN MARCOS, TX 78667 • 512-392-1155

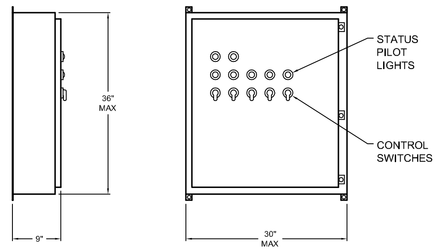

NOTES:
1. MAINTAIN PANEL CLEARANCE PER N.E.C.
2. ENCLOSURE IS INTENDED FOR INDOOR USE PRIMARILY TO PROVIDE A DEGREE OF PROTECTION AGAINST DUST, FALLING DIRT, AND DRIPPING NONCORROSIVE LIQUIDS.

CPL-11887
CONTROL PANEL NEMA-12 ENCLOSURE

2.

ELECTRICAL DETAIL					CPL-11887
DWG. CPL-11887	ASSY.	SCALE 1=1	DATE 12 - 20 - 10		

FOUNTAIN PEOPLE, INC. • PO BOX 807 • SAN MARCOS, TX 78667 • 512-392-1155

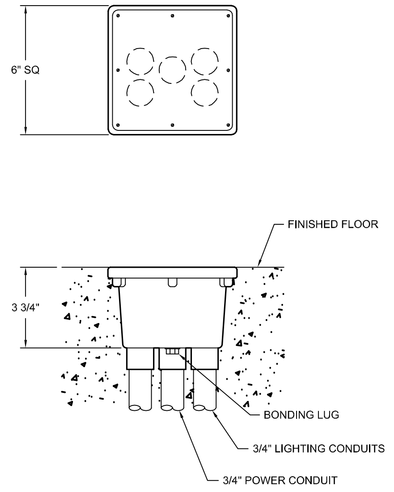

NOTE: CONDUITS BY INSTALLER
POTTING COMPOUND INCLUDED

NB14
FLUSH JUNCTION BOX

3.

JUNCTION BOX DETAIL					NB14
DWG. NB14	ASSY.	SCALE 1=4	DATE 00 - 00 - 00		

FOUNTAIN PEOPLE, INC. • PO BOX 807 • SAN MARCOS, TX 78667 • 512-392-1155

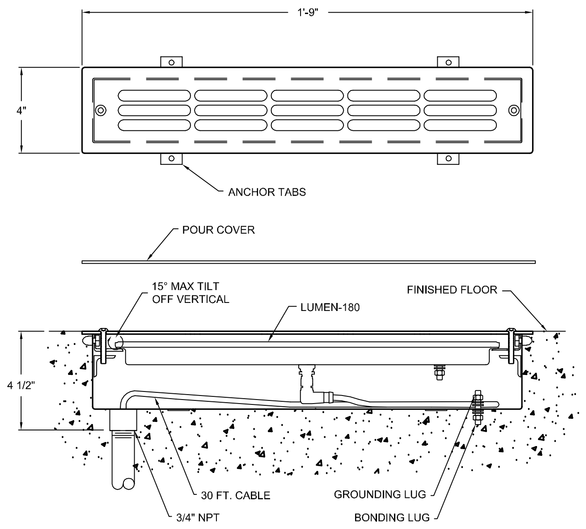

NOTES:
1. LIGHT MUST BE POWERED AND CONTROLLED BY LED CONTROL CARD (CLED-5), PROVIDED IN EQUIPMENT VAULT.
2. CONDUIT BY INSTALLER

LED-180N-11887
LUMEN-180 WITH NICHE

4.

LUMEN-180 WITH NICHE DETAIL					LED-180N-11887
DWG. LED-180N-11887	ASSY.	SCALE 1=4	DATE - -		

FOUNTAIN PEOPLE, INC. • PO BOX 807 • SAN MARCOS, TX 78667 • 512-392-1155

INSTALLATION INSTRUCTIONS

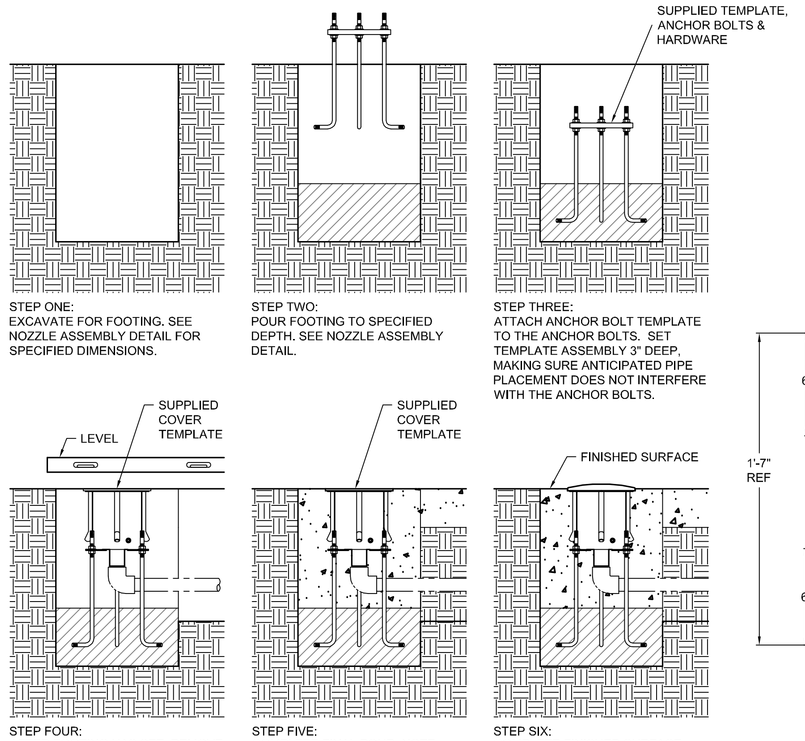

STEP ONE:
EXCAVATE FOR FOOTING. SEE NOZZLE ASSEMBLY DETAIL FOR SPECIFIED DIMENSIONS.

STEP TWO:
POUR FOOTING TO SPECIFIED DEPTH. SEE NOZZLE ASSEMBLY DETAIL.

STEP THREE:
ATTACH ANCHOR BOLT TEMPLATE TO THE ANCHOR BOLTS. SET TEMPLATE ASSEMBLY 3" DEEP. MAKING SURE ANTICIPATED PIPE PLACEMENT DOES NOT INTERFERE WITH THE ANCHOR BOLTS.

STEP FOUR:
AFTER FOOTING HAS SET, REMOVE TEMPLATE. PLACE HOUSING, WITH COVER SECURED, ON THE ANCHORS. USE LEVELING NUTS AND WASHERS TO SET THE TOP OF THE POUR COVER AT THE TOP OF CONCRETE POUR (ALLOW FOR SURFACING). USE A LEVEL TO ENSURE THAT THE HOUSING IS PLUMBED TRUE. MAKE PLUMBING CONNECTIONS.

STEP FIVE:
COMPLETE FINAL POUR. NOTE: HOUSING MUST BE COMPLETELY ENCAPSULATED IN CONCRETE.

STEP SIX:
COMPLETE FINISHED SURFACE AND REMOVE POUR COVER (RETAIN AS A TEMPORARY SERVICE COVER). INSTALL THE TOP PLATE USING THE TAMPER RESISTANT SCREWS PROVIDED. TIGHTEN SCREWS EVENLY.

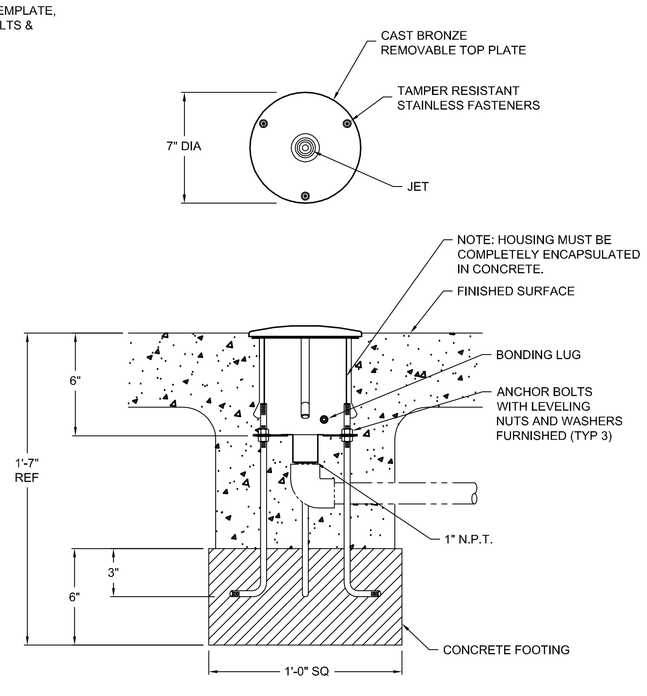

NOTE: PIPE AND ELBOW BY INSTALLER

FIC-S700
NOZZLE ASSEMBLY

5.

SMOOTH-BORE-IN-A-CAN ™ DETAIL					FIC-S700
DWG. FIC-S700	ASSY.	SCALE 1=6	DATE - - 0		

FOUNTAIN PEOPLE, INC. • PO BOX 807 • SAN MARCOS, TX 78667 • 512-392-1155

INSTALLATION INSTRUCTIONS

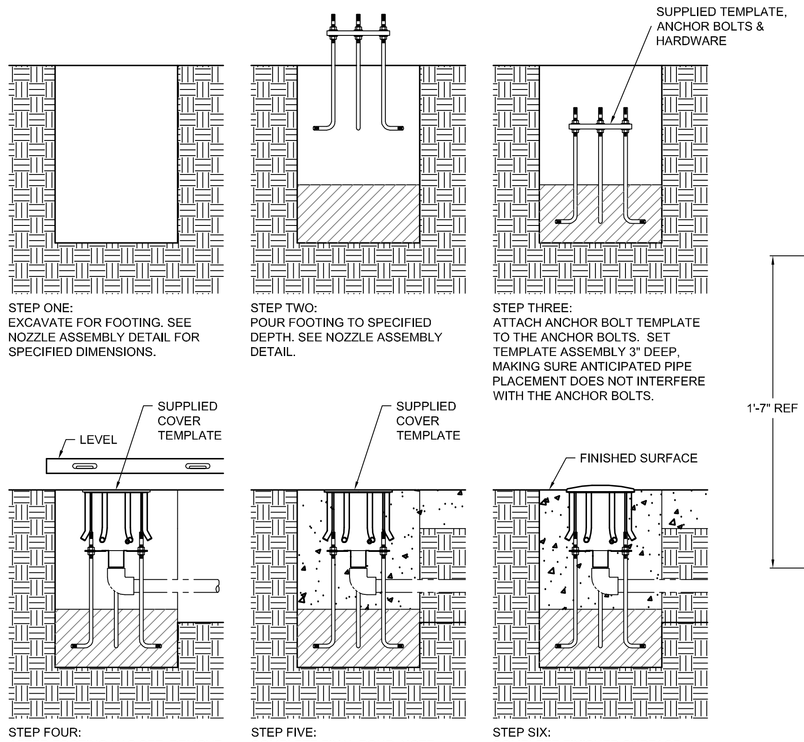

STEP ONE:
EXCAVATE FOR FOOTING. SEE NOZZLE ASSEMBLY DETAIL FOR SPECIFIED DIMENSIONS.

STEP TWO:
POUR FOOTING TO SPECIFIED DEPTH. SEE NOZZLE ASSEMBLY DETAIL.

STEP THREE:
ATTACH ANCHOR BOLT TEMPLATE TO THE ANCHOR BOLTS. SET TEMPLATE ASSEMBLY 3" DEEP. MAKING SURE ANTICIPATED PIPE PLACEMENT DOES NOT INTERFERE WITH THE ANCHOR BOLTS.

STEP FOUR:
AFTER FOOTING HAS SET, REMOVE TEMPLATE. PLACE HOUSING, WITH COVER SECURED, ON THE ANCHORS. USE LEVELING NUTS AND WASHERS TO SET THE TOP OF THE POUR COVER AT THE TOP OF CONCRETE POUR (ALLOW FOR SURFACING). USE A LEVEL TO ENSURE THAT THE HOUSING IS PLUMBED TRUE. MAKE PLUMBING CONNECTIONS.

STEP FIVE:
COMPLETE FINAL POUR. NOTE: HOUSING MUST BE COMPLETELY ENCAPSULATED IN CONCRETE.

STEP SIX:
COMPLETE FINISHED SURFACE AND REMOVE POUR COVER (RETAIN AS A TEMPORARY SERVICE COVER). INSTALL THE TOP PLATE USING THE TAMPER RESISTANT SCREWS PROVIDED. TIGHTEN SCREWS EVENLY.

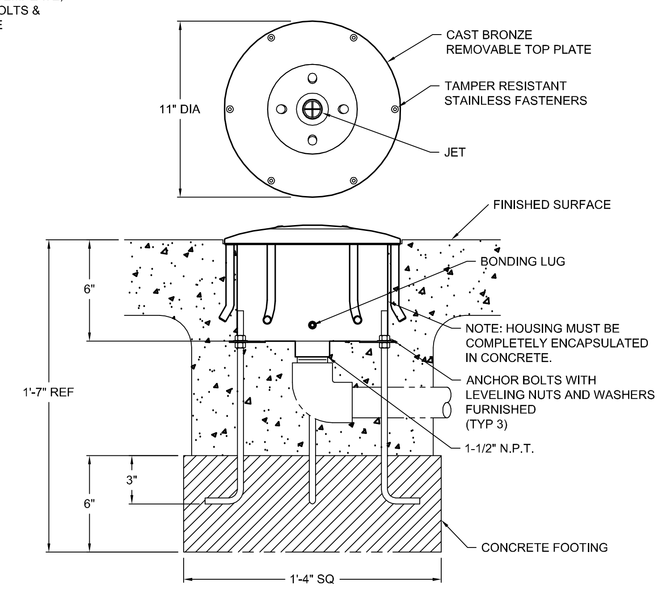

NOTE: PIPE AND ELBOW BY INSTALLER

FIC-G1100
NOZZLE ASSEMBLY

6.

GEYSER-IN-A-CAN ™ DETAIL					FIC-G1100
DWG. FIC-G1100	ASSY.	SCALE 1=6	DATE - -		

FOUNTAIN PEOPLE, INC. • PO BOX 807 • SAN MARCOS, TX 78667 • 512-392-1155

REV	DATE	ISSUED FOR
	2/18/11	BID

DRAWN:	J. KNEER
CHECKED:	WS
DOCUMENT NO.	10.020

RETTLER corporation
3317 Business Park Drive, Stevens Point, WI 54481
Telephone: 715 - 341 - 2833; Fax: 715 - 341 - 0431
email: info @ rettler.com, website: www.rettler.com

FOUNTAIN PEOPLE

FOUNTAIN DETAILS

CITY OF STEVENS POINT
MATHIAS MITCHELL PUBLIC SQUARE
STEVENS POINT, WISCONSIN

C11.5

CITY OF STEVENS POINT
MATHIAS MITCHELL PUBLIC SQUARE
STEVENS POINT, WISCONSIN

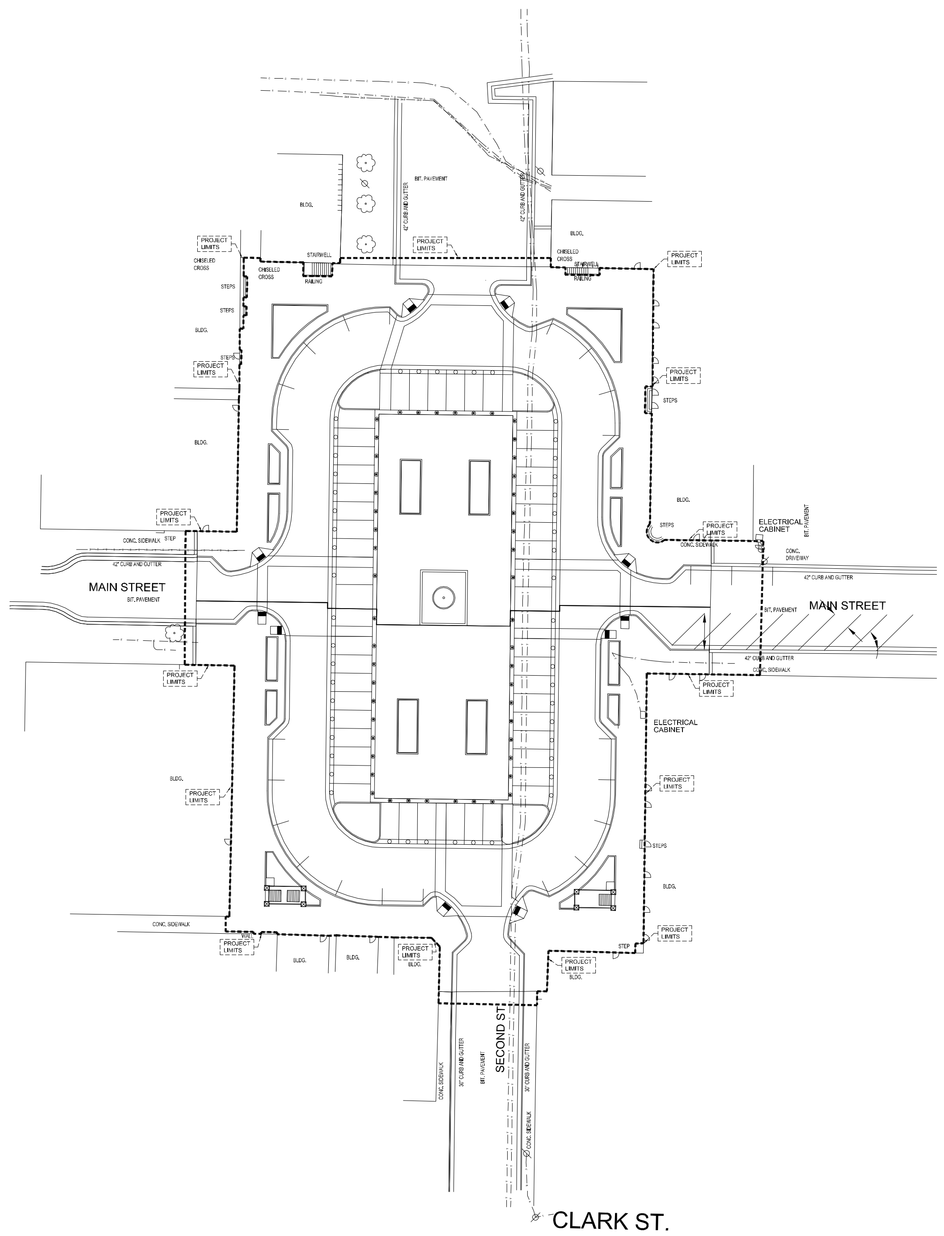

LEGEND

OUTLETS

- DUPLEX RECEPTACLE (120 VOLT)
- WP WEATHERPROOF RECEPTACLE
- GFI GROUND FAULT RECEPTACLE
- IG ISOLATED GROUND RECEPTACLE
- DOUBLE DUPLEX RECEPTACLE
- CLOCK RECEPTACLE
- FLOOR RECEPTACLE, DUPLEX
- SPECIAL EQUIPMENT RECEPTACLE
- TELEPHONE/DATA OUTLET
- FAX FAX OUTLET
- FLOOR TELEPHONE OUTLET
- PP TELEPOWER POLE
- CEILING JUNCTION BOX
- WALL JUNCTION BOX
- JUNCTION BOX WITH FLEX PIGTAIL
- J PULL (JUNCTION) BOX
- CORD DROP

SWITCHES

- $ SINGLE-POLE SWITCH
- DP DOUBLE-POLE SWITCH
- $3 THREE-WAY SWITCH
- $4 FOUR-WAY SWITCH
- $P SWITCH WITH PILOT LIGHT
- $D COMB. SWITCH/DUPLEX RECEPTACLE
- $M MANUAL MOTOR SWITCH (AS REQ'D)
- $L LOW-VOLTAGE SWITCH
- $K KEY SWITCH
- $WP WEATHERPROOF SWITCH
- $MD MOTION DETECTOR SWITCH
- $DIM DIMMER SWITCH (WATTAGE SHOWN)
- DLS DUAL LEVEL SWITCHING

FIXTURES

- SURFACE FLUORESCENT FIXTURE
- ACRYLIC LAY-IN FLUORESCENT FIXTURE
- FLUORESCENT STRIP FIXTURE
- WALL MOUNT FLUORESCENT FIXTURE
- PARABOLIC FLUORESCENT FIXTURE
- 4 LAMP HIGH BAY FIXTURE
- 6 LAMP HIGH BAY FIXTURE
- INDIRECT LIGHT FIXTURE
- INDIRECT-OUT LIGHT FIXTURE
- LINEAR DIRECT FIXTURE (length specified)
- N NIGHT LIGHT (on 24 hours)
- EM FIXTURE ON EMERGENCY CIRCUIT
- RECESSED DOWNLIGHT
- RECESSED WALLWASHER
- WALL SCONCE FIXTURE
- INCANDESCENT WALL MOUNTED
- INCANDESCENT CEILING MOUNTED
- MONOPOINT FIXTURE
- LIGHT TRACK (length specified)
- CH LIGHT TRACK FIXTURE OR FLOOD LIGHT
- KEYLESS LAMPHOLDER
- PULLCHAIN LAMPHOLDER
- POLE MOUNTED FIXTURE
- WALL MOUNTED FIXTURE
- POLE LUMINAIRE
- BOLLARD
- H.I.D. CEILING FIXTURE
- DOCK LIGHT
- WALL RLM

SERVICE and EQUIPMENT

- T OR TRANSFORMER, PAD MOUNTED
- T TRANSFORMER, DRY (KVA shown)
- DS DISCONNECT SWITCH (fuse size shown)
- NF NON-FUSED DISC. (switch size shown)
- PANELBOARD, SURFACE MOUNTED
- PANELBOARD, FLUSH MOUNTED
- WEATHERHEAD
- M OR UTILITY METER, AS REQUIRED
- GENERATOR, KW SHOWN
- TELEPHONE TERMINAL BOARD
- TTC TELEPHONE TERMINAL CABINET (surface unless otherwise noted)
- GROUND CONNECTION PER N.E.C.
- WIREWAY
- CIRCUIT BREAKER
- ENCLOSED CIRCUIT BREAKER
- ELECTRICAL CABINET
- E FLUSH LANDSCAPE ENCLOSED
- P POST PEDESTAL
- F FOUNTAIN RECEPTACLE
- MH MANHOLE

CIRCUITRY and RACEWAYS

- CONDUIT INSTALLED (underground)
- CONDUIT INSTALLED (overhead)
- STUB UP
- STUB DOWN
- 1,3 HOME RUN (with circuit numbers)
- CONDUCTORS (ground, neutral, phase, switch leg, two travelers)
- END OF RUN, CAP AND STAKE
- "RUN CONTINUES" INDICATION
- OR FLEXIBLE PIGTAILS/CONNECTIONS

DESIGNATIONS

- 1 REVISION NOTE
- # FLAG NOTE
- # KEY NOTE
- AFF ABOVE FINISH FLOOR
- AFG ABOVE FINISH GRADE

WISCONSIN
TIMOTHY J. SMITH
E-18065
MILWAUKEE, WI
DESIGNER

PIEPER ELECTRIC	E0
5070 N. 35TH STREET	COVER PAGE
MILWAUKEE, WI 53209	PROJECT NAME: STEVENS POINT MATHIAS MITCHELL PUBLIC SQUARE
(414) 462-7700	JOB #
WWW.PIEPERPOWER.COM	PM: AS DRAFTER: KS REVIEW:

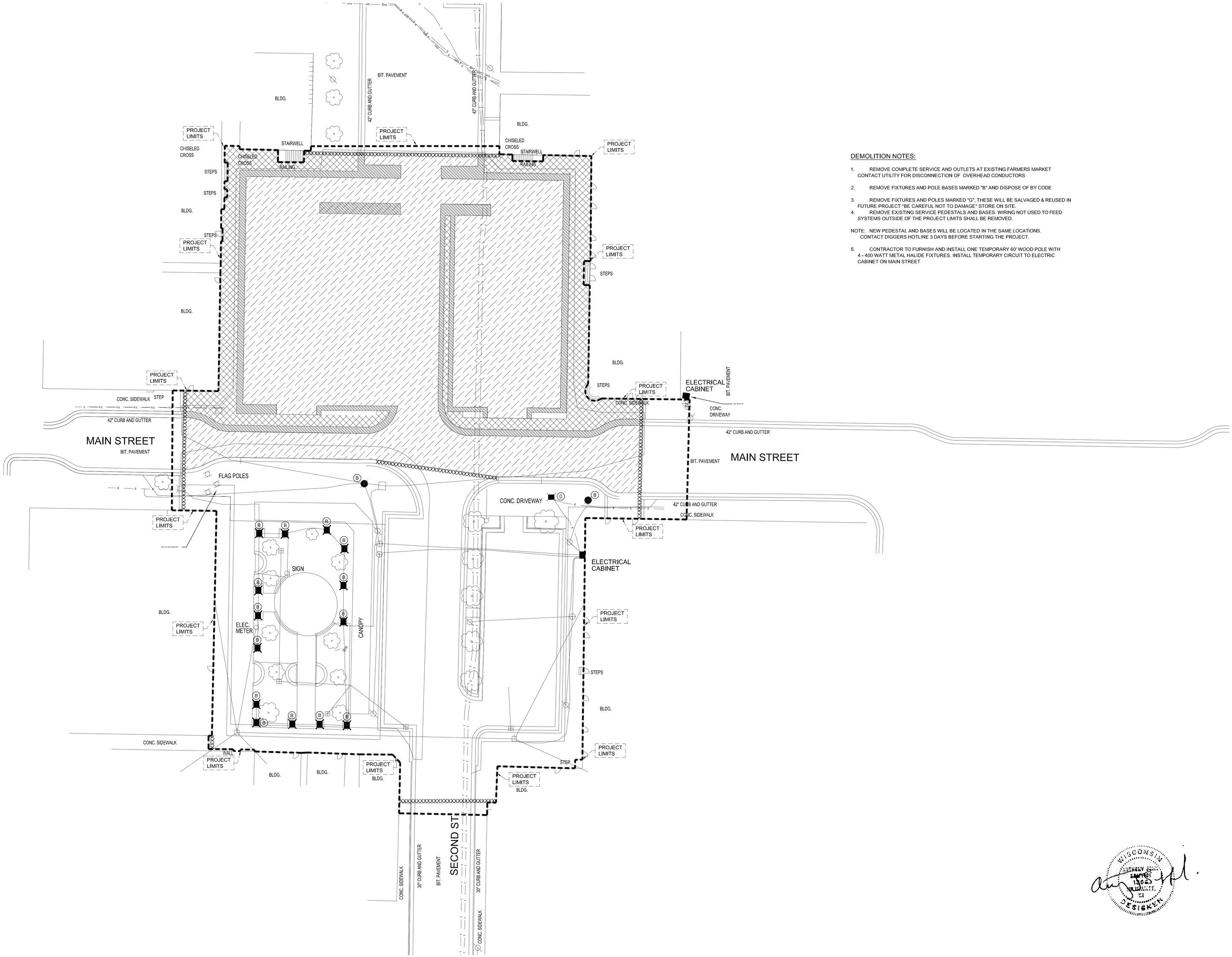

DEMOLITION NOTES:

1. REMOVE COMPLETE SERVICE AND OUTLETS AT EXISTING FARMERS MARKET CONTACT UTILITY FOR DISCONNECTION OF OVERHEAD CONDUCTORS

2. REMOVE FIXTURES AND POLE BASES MARKED "B" AND DISPOSE OF BY CODE

3. REMOVE FIXTURES AND POLES MARKED "G", THESE WILL BE SALVAGED & REUSED IN FUTURE PROJECT "BE CAREFUL NOT TO DAMAGE" STORE ON SITE.
4. REMOVE EXISTING SERVICE PEDESTALS AND BASES. WIRING NOT USED TO FEED SYSTEMS OUTSIDE OF THE PROJECT LIMITS SHALL BE REMOVED.

NOTE: NEW PEDESTAL AND BASES WILL BE LOCATED IN THE SAME LOCATIONS. CONTACT DIGGERS HOTLINE 3 DAYS BEFORE STARTING THE PROJECT.

5. CONTRACTOR TO FURNISH AND INSTALL ONE TEMPORARY 60' WOOD POLE WITH 4 - 400 WATT METAL HALIDE FIXTURES. INSTALL TEMPORARY CIRCUIT TO ELECTRIC CABINET ON MAIN STREET

1 / E0.1 ELECTRIC DEMOLITION PLAN - PHASE 1
1" = 20'-0"

N

PIEPER ELECTRIC
5070 N. 35TH STREET
MILWAUKEE, WI 53209
(414) 462-7700
WWW.PIEPERPOWER.COM

E0.1
ELECTRIC DEMOLITION PLAN - PHASE 1
PROJECT NAME: STEVENS POINT MATHIAS MITCHELL PUBLIC SQUARE
JOB #
PM: AS DRAFTER: KS REVIEW:

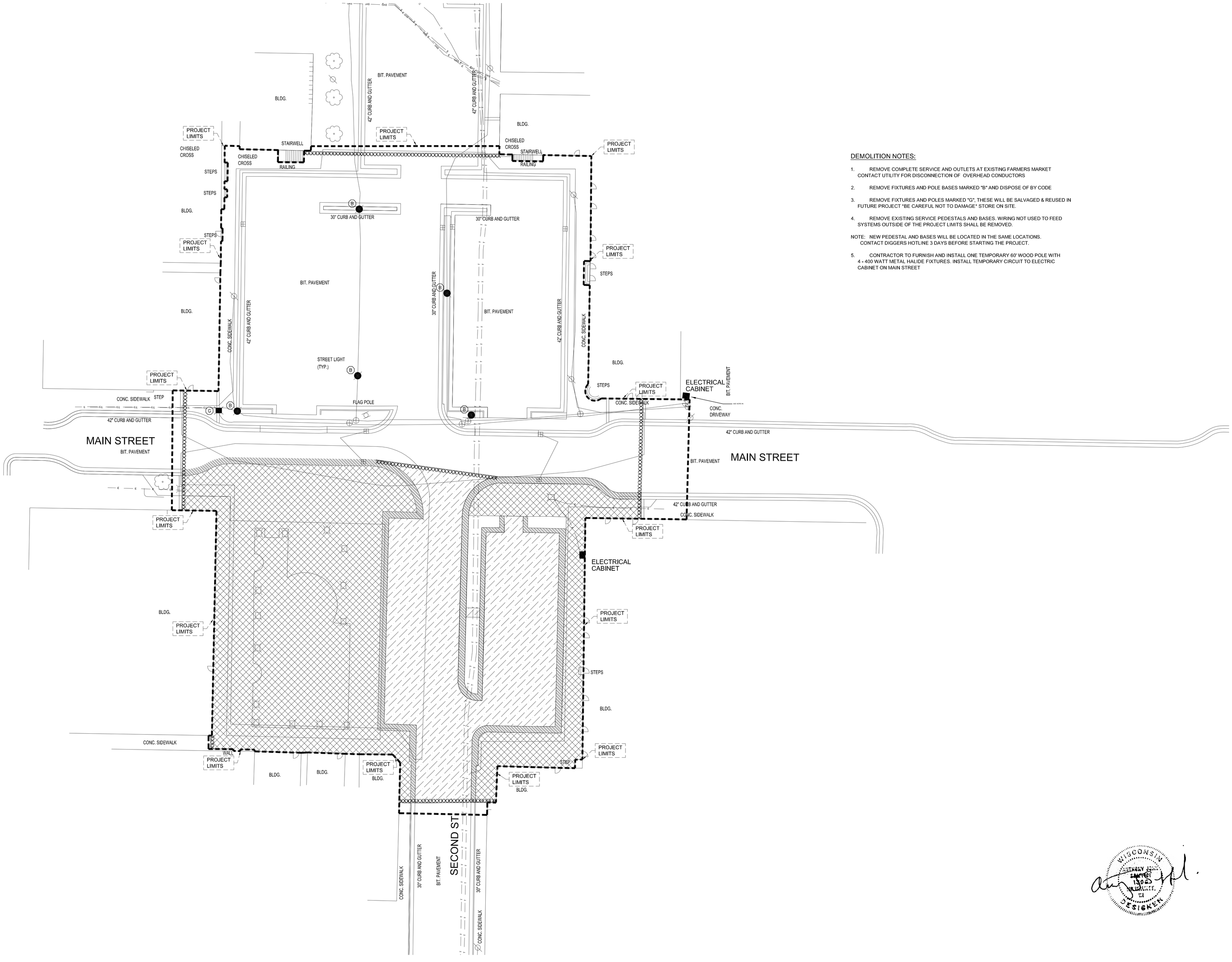

DEMOLITION NOTES:

1. REMOVE COMPLETE SERVICE AND OUTLETS AT EXISTING FARMERS MARKET CONTACT UTILITY FOR DISCONNECTION OF OVERHEAD CONDUCTORS

2. REMOVE FIXTURES AND POLE BASES MARKED "B" AND DISPOSE OF BY CODE

3. REMOVE FIXTURES AND POLES MARKED "G", THESE WILL BE SALVAGED & REUSED IN FUTURE PROJECT *BE CAREFUL NOT TO DAMAGE* STORE ON SITE.

4. REMOVE EXISTING SERVICE PEDESTALS AND BASES. WIRING NOT USED TO FEED SYSTEMS OUTSIDE OF THE PROJECT LIMITS SHALL BE REMOVED.

NOTE: NEW PEDESTAL AND BASES WILL BE LOCATED IN THE SAME LOCATIONS. CONTACT DIGGERS HOTLINE 3 DAYS BEFORE STARTING THE PROJECT.

5. CONTRACTOR TO FURNISH AND INSTALL ONE TEMPORARY 60' WOOD POLE WITH 4 - 400 WATT METAL HALIDE FIXTURES. INSTALL TEMPORARY CIRCUIT TO ELECTRIC CABINET ON MAIN STREET

1 / E0.2 ELECTRIC DEMOLITION PLAN - PHASE 2
1" = 20'-0"

N

PIEPER ELECTRIC	E0.2
5070 N. 35TH STREET	ELECTRIC DEMOLITION PLAN - PHASE 2
MILWAUKEE, WI 53209	PROJECT NAME: STEVENS POINT MATHIAS MITCHELL PUBLIC SQUARE
(414) 462-7700	JOB #
WWW.PIEPERPOWER.COM	PM: AS DRAFTER: KS REVIEW:

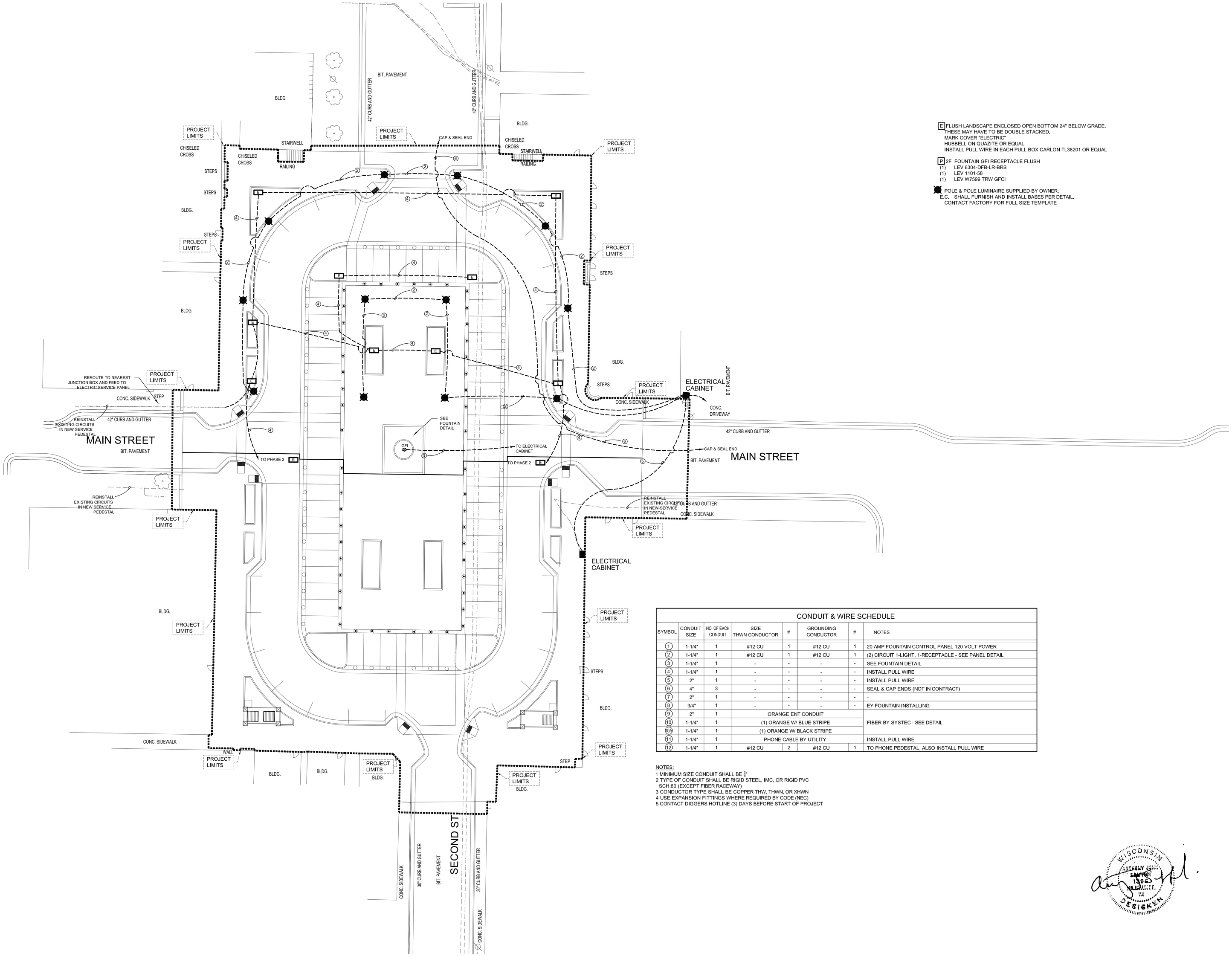

E FLUSH LANDSCAPE ENCLOSED OPEN BOTTOM 24" BELOW GRADE. THESE MAY HAVE TO BE DOUBLE STACKED.
MARK COVER "ELECTRIC"
HUBBELL ON QUAZITE OR EQUAL
INSTALL PULL WIRE IN EACH PULL BOX CARLON TL38201 OR EQUAL

P 2F FOUNTAIN GFI RECEPTACLE FLUSH
(1) LEV 6304-DFB-LR-BRS
(1) LEV 1101-58
(1) LEV W7599 TRW GFCI

POLE & POLE LUMINAIRE SUPPLIED BY OWNER.
E.C. SHALL FURNISH AND INSTALL BASES PER DETAIL.
CONTACT FACTORY FOR FULL SIZE TEMPLATE

CONDUIT & WIRE SCHEDULE

SYMBOL	CONDUIT SIZE	NO. OF EACH CONDUIT	SIZE THWN CONDUCTOR	#	GROUNDING CONDUCTOR	#	NOTES
1	1-1/4"	1	#12 CU	1	#12 CU	1	20 AMP FOUNTAIN CONTROL PANEL 120 VOLT POWER
2	1-1/4"	1	#12 CU	1	#12 CU	1	(2) CIRCUIT 1-LIGHT, 1-RECEPTACLE - SEE PANEL DETAIL
3	1-1/4"	1	-	-	-	-	SEE FOUNTAIN DETAIL
4	1-1/4"	1	-	-	-	-	INSTALL PULL WIRE
5	2"	1	-	-	-	-	INSTALL PULL WIRE
6	4"	3	-	-	-	-	SEAL & CAP ENDS (NOT IN CONTRACT)
7	2"	1	-	-	-	-	-
8	3/4"	1	-	-	-	-	EY FOUNTAIN INSTALLING
9	2"	1	ORANGE ENT CONDUIT				FIBER BY SYSTEC - SEE DETAIL
10	1-1/4"	1	(1) ORANGE W/ BLUE STRIPE				
10A	1-1/4"	1	(1) ORANGE W/ BLACK STRIPE				
11	1-1/4"	1	PHONE CABLE BY UTILITY				INSTALL PULL WIRE
12	1-1/4"	1	#12 CU	2	#12 CU	1	TO PHONE PEDESTAL, ALSO INSTALL PULL WIRE

NOTES:
1 MINIMUM SIZE CONDUIT SHALL BE ¾"
2 TYPE OF CONDUIT SHALL BE RIGID STEEL, IMC, OR RIGID PVC SCH.80 (EXCEPT FIBER RACEWAY)
3 CONDUCTOR TYPE SHALL BE COPPER THW, THWN, OR XHWN
4 USE EXPANSION FITTINGS WHERE REQUIRED BY CODE (NEC)
5 CONTACT DIGGERS HOTLINE (3) DAYS BEFORE START OF PROJECT

1 / E1 ELECTRICAL LAYOUT - PHASE 1
1" = 20'-0"

N

PIEPER ELECTRIC
5070 N. 35TH STREET
MILWAUKEE, WI 53209
(414) 462-7700
WWW.PIEPERPOWER.COM

E1
ELECTRICAL LAYOUT - PHASE 1
PROJECT NAME: STEVENS POINT MATHIAS MITCHELL PUBLIC SQUARE
JOB #
PM: AS DRAFTER: KS REVIEW:

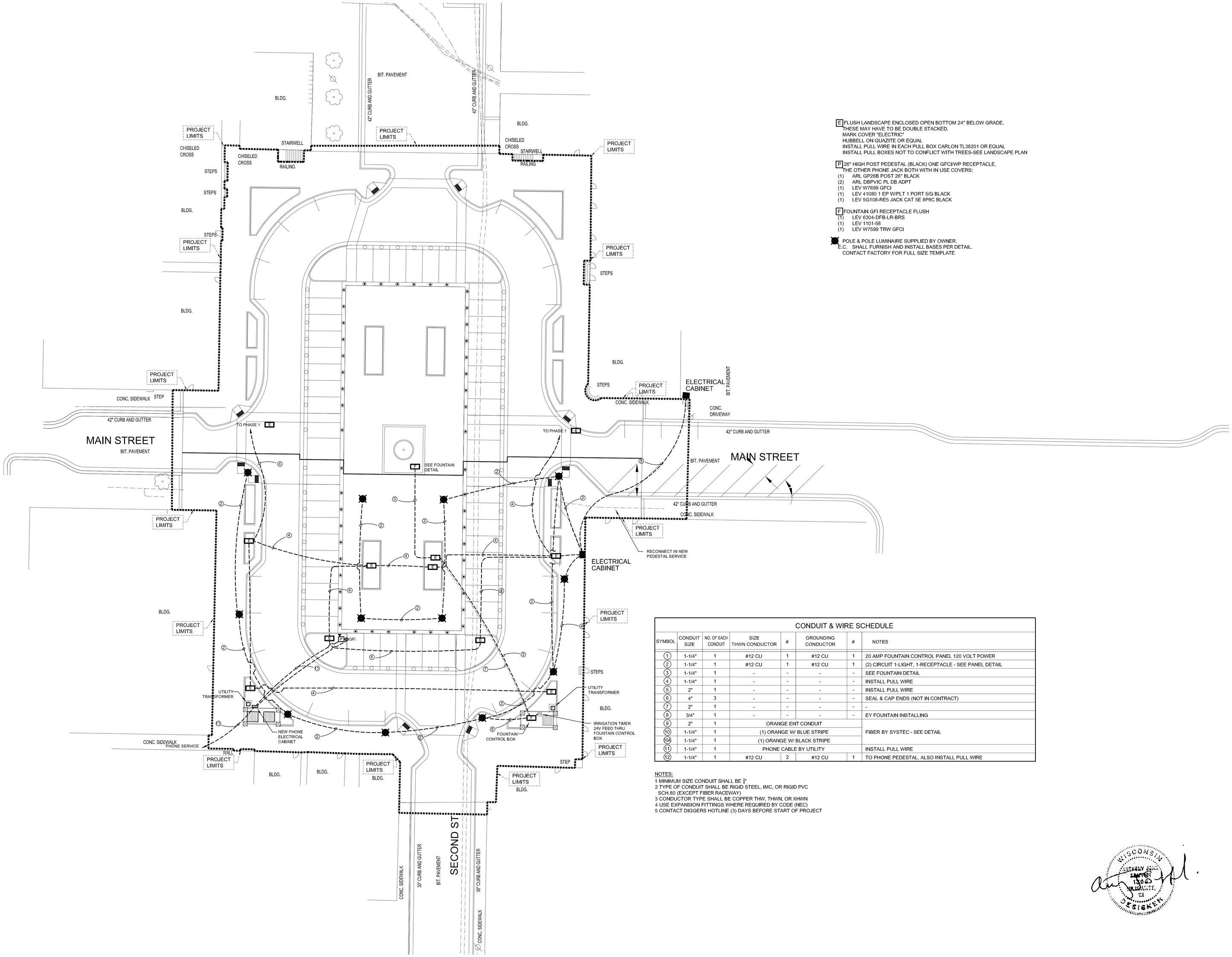

E FLUSH LANDSCAPE ENCLOSED OPEN BOTTOM 24" BELOW GRADE.
THESE MAY HAVE TO BE DOUBLE STACKED.
MARK COVER "ELECTRIC"
HUBBELL ON QUAZITE OR EQUAL
INSTALL PULL WIRE IN EACH PULL BOX CARLON TL38201 OR EQUAL
INSTALL PULL BOXES NOT TO CONFLICT WITH TREES-SEE LANDSCAPE PLAN

P 26" HIGH POST PEDESTAL (BLACK) ONE GFCI/WP RECEPTACLE,
THE OTHER PHONE JACK BOTH WITH IN USE COVERS:
(1) ARL GP26B POST 26" BLACK
(2) ARL DBPVIC PL DB ADPT
(1) LEV W7699 GFCI
(1) LEV 41080 1 EP W/PLT 1 PORT 5/G BLACK
(1) LEV 5G108-RES JACK CAT 5E 8P8C BLACK

F FOUNTAIN GFI RECEPTACLE FLUSH
(1) LEV 6304-DFB-LR-BRS
(1) LEV 1101-58
(1) LEV W7599 TRW GFCI

POLE & POLE LUMINAIRE SUPPLIED BY OWNER.
E.C. SHALL FURNISH AND INSTALL BASES PER DETAIL.
CONTACT FACTORY FOR FULL SIZE TEMPLATE

CONDUIT & WIRE SCHEDULE

SYMBOL	CONDUIT SIZE	NO. OF EACH CONDUIT	SIZE THWN CONDUCTOR	#	GROUNDING CONDUCTOR	#	NOTES
1	1-1/4"	1	#12 CU	1	#12 CU	1	20 AMP FOUNTAIN CONTROL PANEL 120 VOLT POWER
2	1-1/4"	1	#12 CU	1	#12 CU	1	(2) CIRCUIT 1-LIGHT, 1-RECEPTACLE - SEE PANEL DETAIL
3	1-1/4"	1	-	-	-	-	SEE FOUNTAIN DETAIL
4	1-1/4"	1	-	-	-	-	INSTALL PULL WIRE
5	2"	1	-	-	-	-	INSTALL PULL WIRE
6	4"	3	-	-	-	-	SEAL & CAP ENDS (NOT IN CONTRACT)
7	2"	1	-	-	-	-	-
8	3/4"	1	-	-	-	-	EY FOUNTAIN INSTALLING
9	2"	1	ORANGE ENT CONDUIT				FIBER BY SYSTEC - SEE DETAIL
10	1-1/4"	1	(1) ORANGE W/ BLUE STRIPE				
10A	1-1/4"	1	(1) ORANGE W/ BLACK STRIPE				
11	1-1/4"	1	PHONE CABLE BY UTILITY				INSTALL PULL WIRE
12	1-1/4"	1	#12 CU	2	#12 CU	1	TO PHONE PEDESTAL, ALSO INSTALL PULL WIRE

NOTES:
1 MINIMUM SIZE CONDUIT SHALL BE ¾"
2 TYPE OF CONDUIT SHALL BE RIGID STEEL, IMC, OR RIGID PVC SCH.80 (EXCEPT FIBER RACEWAY)
3 CONDUCTOR TYPE SHALL BE COPPER THW, THWN, OR XHWN
4 USE EXPANSION FITTINGS WHERE REQUIRED BY CODE (NEC)
5 CONTACT DIGGERS HOTLINE (3) DAYS BEFORE START OF PROJECT

WISCONSIN
ANTHONY J. SANTORI
S-13025
MILWAUKEE, WI
DESIGNER

1 / E2 ELECTRICAL LAYOUT - PHASE 2
1" = 20'-0"

N

PIEPER ELECTRIC
5070 N. 35TH STREET
MILWAUKEE, WI 53209
(414) 462-7700
WWW.PIEPERPOWER.COM

E2
ELECTRICAL LAYOUT - PHASE 2
PROJECT NAME: STEVENS POINT MATHIAS MITCHELL PUBLIC SQUARE
JOB #
PM: AS DRAFTER: KS REVIEW:

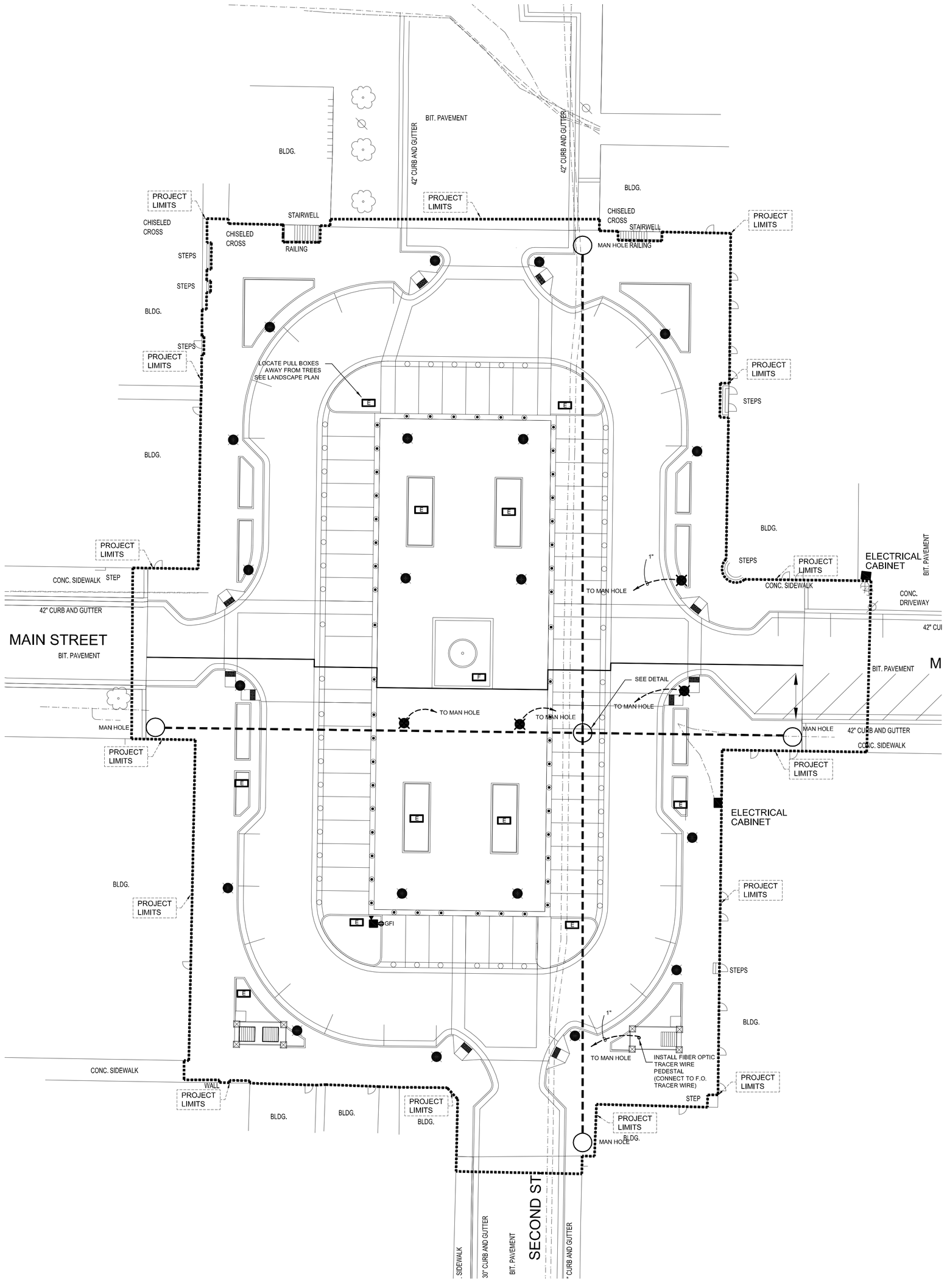

1 FIBER OPTIC LAYOUT
E3 NTS

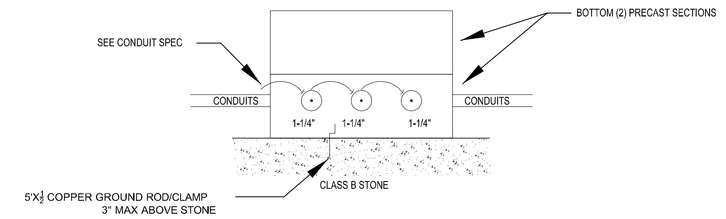

FIBER OPTIC DETAIL
NTS

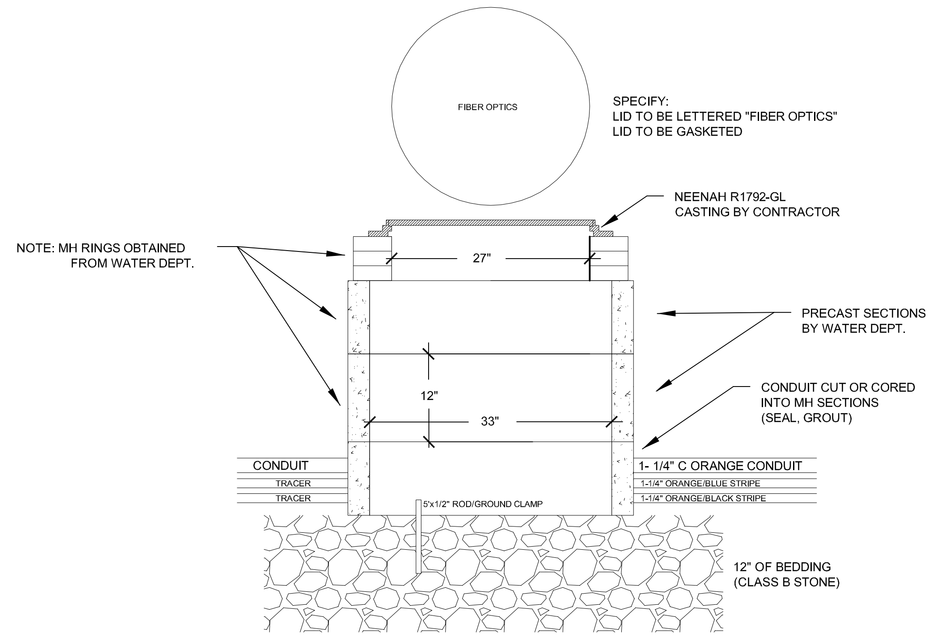

FIBER OPTIC PULL BOX DETAIL
NTS

FIBER PULL BOX & CONDUIT SPECIFICATION

1. CONDUIT TYPE: PLOW DUCT CARLON SDR-11 HDPE OR EQUAL
1A. 1-¼" TYPE A6C6N/JNNA ONE RUN ORANGE/BLUE TRACER THE OTHER ORANGE/BLACK TRACER
1B. 1-¼" CARLON A13C6N/JNNA ORANGE
2. INSTALL PULL WIRE (1) IN SOLID ORANGE CONDUIT TYPE 1800 LB. MULE TAPE CARLON TL38203 OR EQUAL
3. INSTALL LOCATE WIRE IN SOLID ORANGE CONDUIT TYPE #12 AWG UL TYPE USE/2/THW/2 CU STRANDED WIRE WITH PVC JACKET
4. INSTALL IN EACH PULL BOX ONE 5'x¾" COPPER CLAD GROUND ROD EXPOSED NO MORE THAN 3" ABOVE SURFACE OF CRUSHED STONE BASE
5. PROVIDE GROUND CLAMP AT EACH ROD BURNDY TYPE C1181ED OR EQUAL
6. E.C. TO FURNISH AND INSTALL NEEHAH TYPE R1792 GL CASTING FLANGE AND COVER (COVER LABELED "FIBER OPTICS")
7. PROVIDE 1" CONDUIT BETWEEN CENTER JUNCTION BOX AND MARKER LIGHT POLES AS SHOWN ON PRINT.

PIEPER ELECTRIC	E3
5070 N. 35TH STREET	ELECTRICAL DETAILS
MILWAUKEE, WI 53209	PROJECT NAME: STEVENS POINT MATHIAS MITCHELL PUBLIC SQUARE
(414) 462-7700	JOB #
WWW.PIEPERPOWER.COM	PM: AS DRAFTER: KS REVIEW:

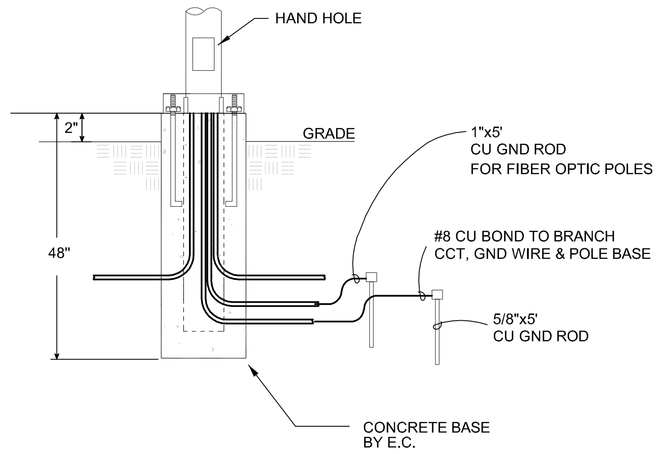

CONCRETE POLE FIBER OPTIC BASE DETAIL
NTS

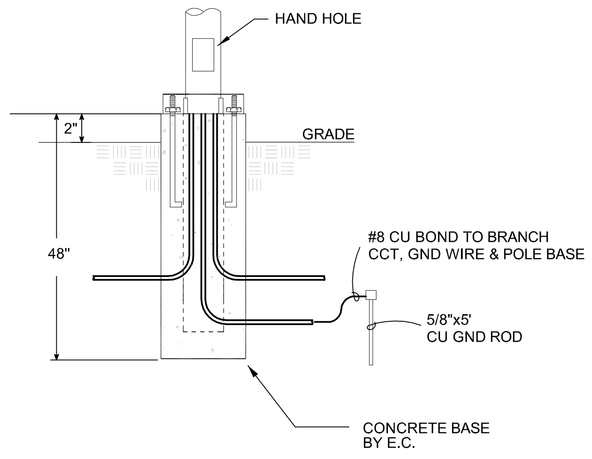

CONCRETE POLE BASE DETAIL
NTS

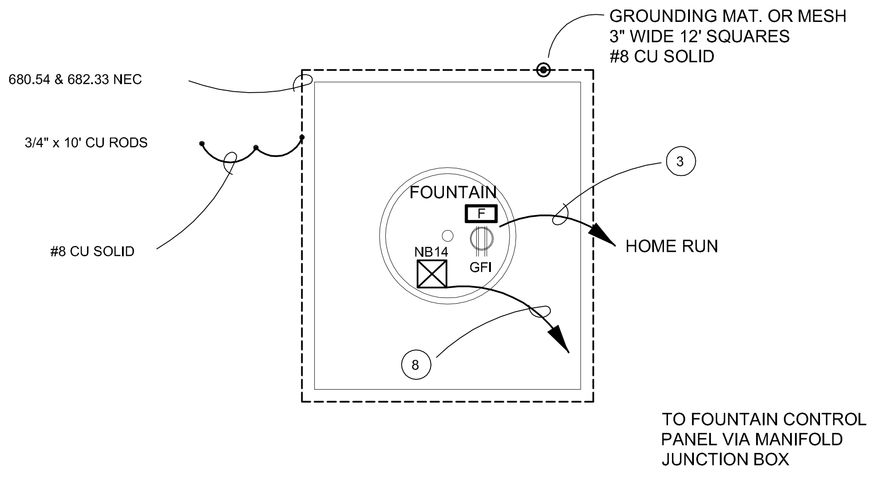

FOUNTAIN DETAIL
NTS

CONDUIT & WIRE SCHEDULE

SYMBOL	CONDUIT SIZE	NO. OF EACH CONDUIT	SIZE THWN CONDUCTOR	#	GROUNDING CONDUCTOR	#	NOTES
1	1-1/4"	1	#12 CU	1	#12 CU	1	20 AMP FOUNTAIN CONTROL PANEL 120 VOLT POWER
2	1-1/4"	1	#12 CU	1	#12 CU	1	(2) CIRCUIT 1-LIGHT, 1-RECEPTACLE - SEE PANEL DETAIL
3	1-1/4"	1	-	-	-	-	SEE FOUNTAIN DETAIL
4	1-1/4"	1	-	-	-	-	INSTALL PULL WIRE
5	2"	1	-	-	-	-	INSTALL PULL WIRE
6	4"	3	-	-	-	-	SEAL & CAP ENDS (NOT IN CONTRACT)
7	2"	1	-	-	-	-	-
8	3/4"	1	-	-	-	-	EY FOUNTAIN INSTALLING
9	1-1/4"	1	ORANGE ENT CONDUIT				FIBER BY SYSTEC - SEE DETAIL
10	1-1/4"	1	(1) ORANGE W/ BLUE STRIPE				
10A	1-1/4"	1	(1) ORANGE W/ BLACK STRIPE				
11	1-1/4"	1	PHONE CABLE BY UTILITY				INSTALL PULL WIRE
12	1-1/4"	1	#12 CU	2	#12 CU	1	TO PHONE PEDESTAL, ALSO INSTALL PULL WIRE

NOTES:
1 MINIMUM SIZE CONDUIT SHALL BE ¾"
2 TYPE OF CONDUIT SHALL BE RIGID STEEL, IMC, OR RIGID PVC SCH.80 (EXCEPT FIBER RACEWAY)
3 CONDUCTOR TYPE SHALL BE COPPER THW, THWN, OR XHWN
4 USE EXPANSION FITTINGS WHERE REQUIRED BY CODE (NEC)
5 CONTACT DIGGERS HOTLINE (3) DAYS BEFORE START OF PROJECT

PIEPER ELECTRIC
5070 N. 35TH STREET
MILWAUKEE, WI 53209
(414) 462-7700
WWW.PIEPERPOWER.COM

E4
ELECTRICAL DETAILS
PROJECT NAME: STEVENS POINT MATHIAS MITCHELL PUBLIC SQUARE
JOB #
PM: AS DRAFTER: KS REVIEW:

TYPICAL SERVICE DETAIL FOUNDATION PLAN - PHASE 1
NTS

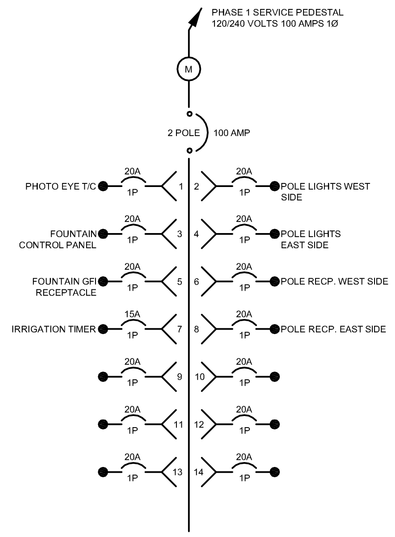

TYPICAL SERVICE DETAIL FOUNDATION PLAN - PHASE 2
NTS

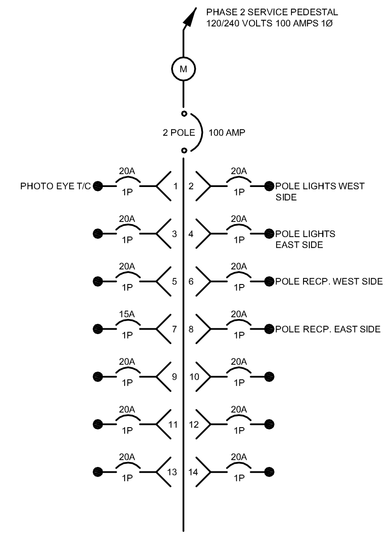

PHONE SERVICE CABINET DETAIL
NTS

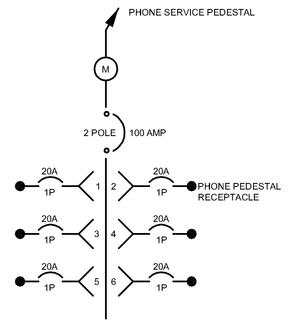

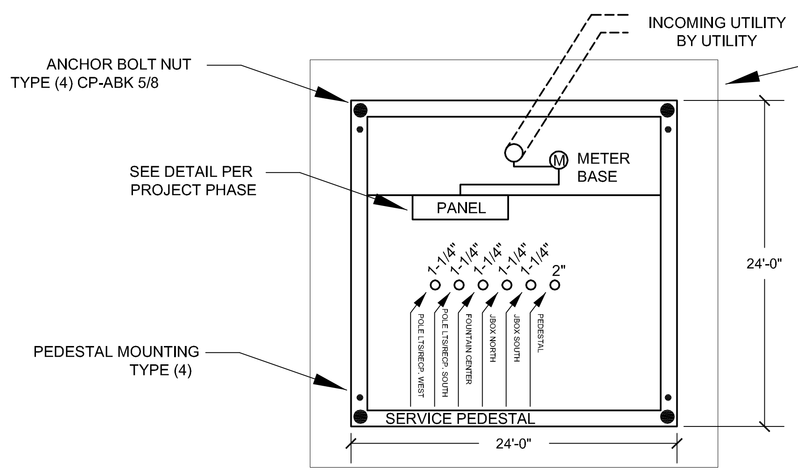

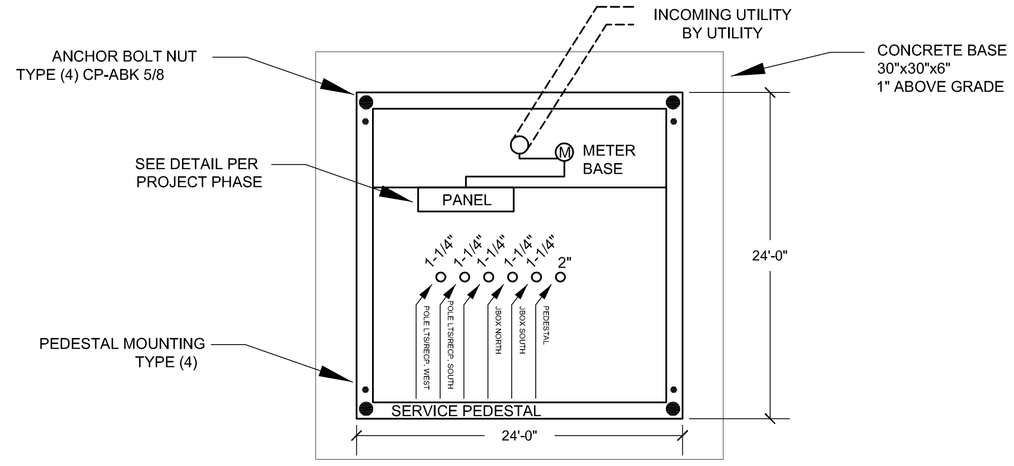

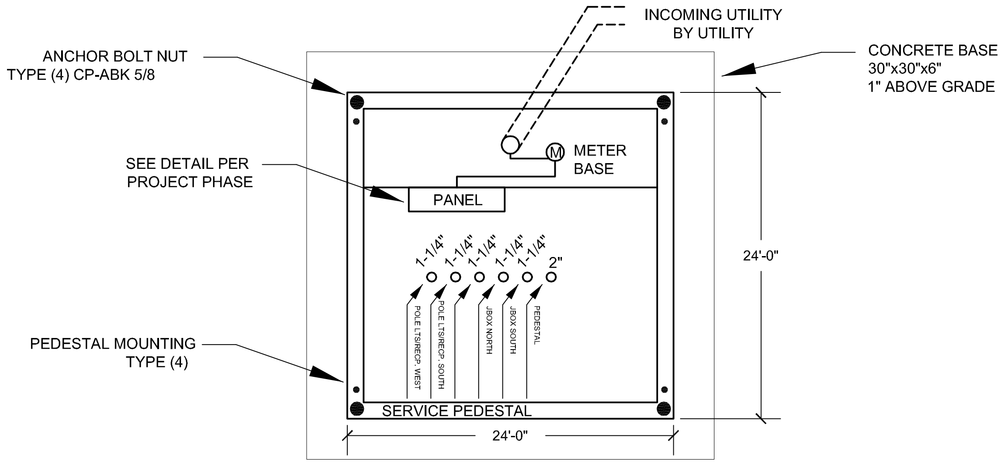

PHONE SERVICE CABINET DETAIL
NTS

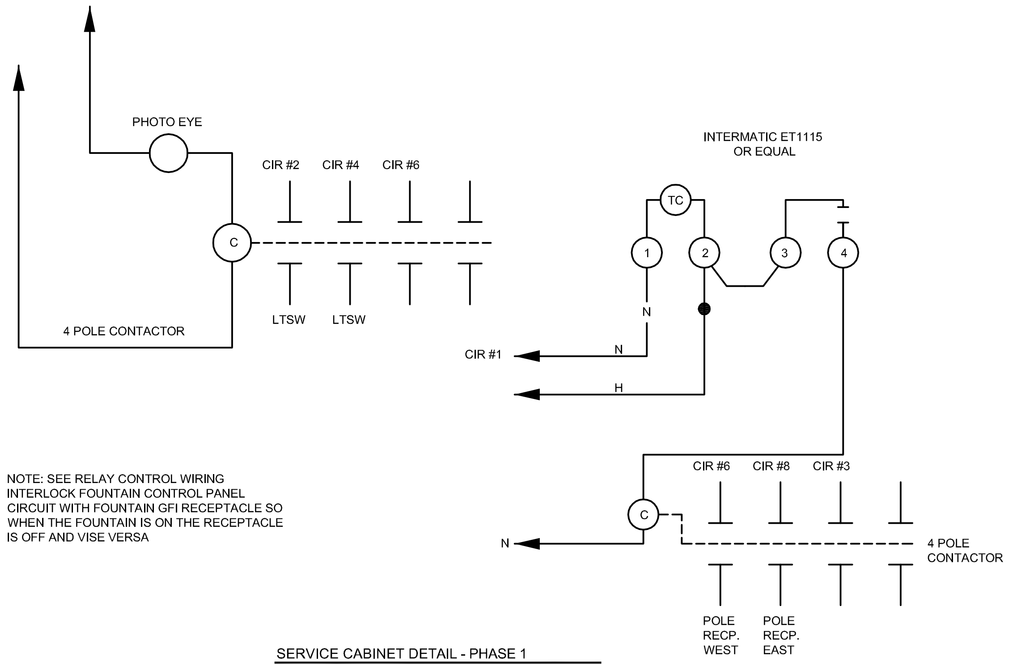

NOTE: SEE RELAY CONTROL WIRING INTERLOCK FOUNTAIN CONTROL PANEL CIRCUIT WITH FOUNTAIN GFI RECEPTACLE SO WHEN THE FOUNTAIN IS ON THE RECEPTACLE IS OFF AND VISE VERSA

SERVICE CABINET DETAIL - PHASE 1
NTS

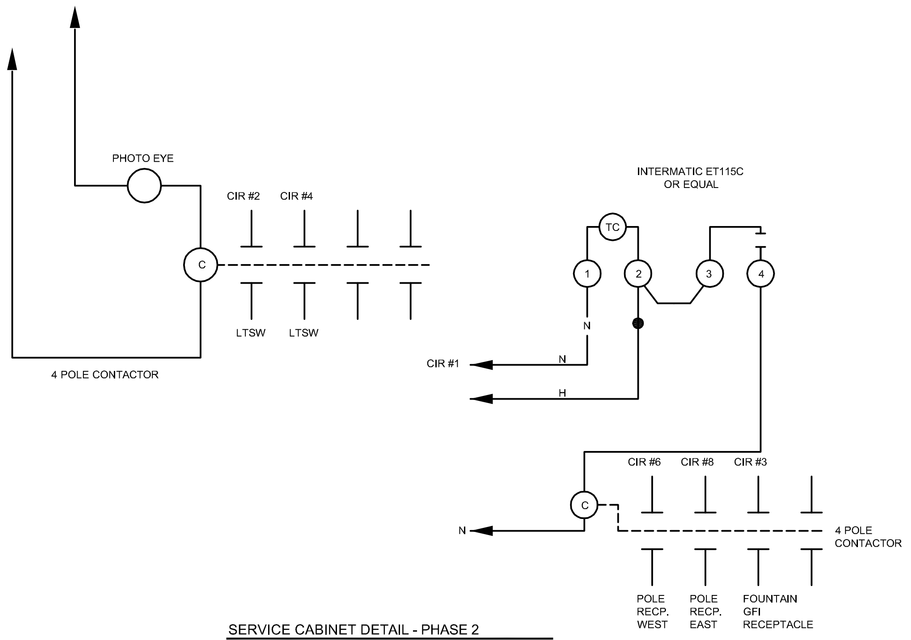

SERVICE CABINET DETAIL - PHASE 2
NTS

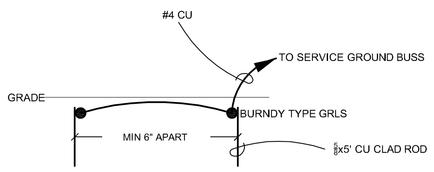

SERVICE GROUNDING DETAIL
NTS

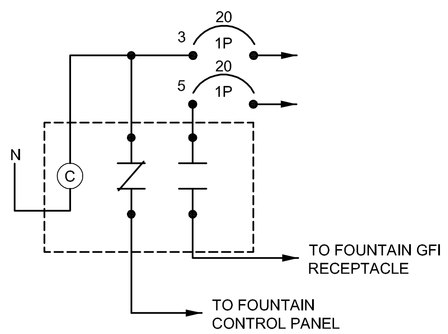

FOUNTAIN CONTROL CONTACTOR DETAIL
NTS

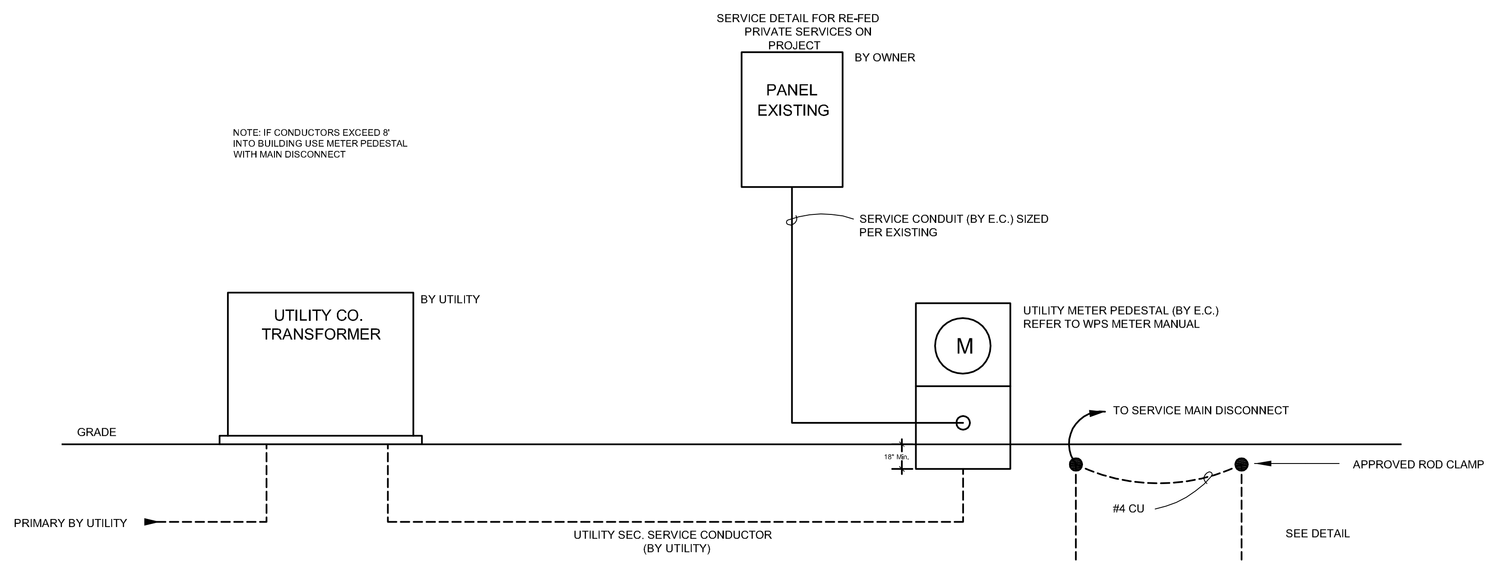

NOTE: IF CONDUCTORS EXCEED 8' INTO BUILDING USE METER PEDESTAL WITH MAIN DISCONNECT

PRIVATE SERVICE DETAIL
NTS

ELECTRICAL CABINET SPECIFICATIONS:

MILBANK OR EQUAL
MILBANK MODEL #CP3B-DXX PHASE 1&2, AND PHONE SERVICE (SEE NOTE 1)
MILBANK MODEL CP-24-CALT PAD MT BASE 24" (SEE NOTE 2)
EACH (3) TOTAL CONSISTING OF:
-CP3B51119B225P 120/240V 1Ø 3W 100A RINGLESS SOCKET W/
LEVER BYPASS 20 CIRCUIT LOAD CENTER 100A 2P MAIN CIRCUIT BREAKER BACK FED
-PE SOCKET (SUPPLY PHOTO EYE)
-4 POLE ELECTRICAL CONTACTOR 2 UNIT EACH
-PARAGON MEDEL EC 4000 OR EQUAL TIMECLOCK
-(10) 20 AMP 1P CIRCUIT BREAKERS
-10 CIRCUIT BREAKER SPACES/SPARES
-STEEL ENCLOSURE PAINTED BLACK FINISH BY MFG

NOTES:
1. TELEPHONE SERVICE PANEL TO SAME ONLY WITH 12 CIRCUIT PANEL
2. ELECTRICAL CONTRACTOR WILL BE RESPONSIBLE FOR REMOVING EXISTING BASES IN PHASE 1&2 AND INSTALLING NEW CONCRETE BASES FOR NEW METER PEDESTAL
3. DIGGERS HOT LINE TO BE CONTACTED 3 DAYS BEFORE WORK IS STARTED.
4 WORK WITH UTILITY ON INSTALLATION OF UNDERGROUND SERVICE CONDUCTORS.

PIEPER ELECTRIC	E5
5070 N. 35TH STREET	SERVICE RISER DETAILS
MILWAUKEE, WI 53209	PROJECT NAME: STEVENS POINT MATHIAS MITCHELL PUBLIC SQUARE
(414) 462-7700	JOB #
WWW.PIEPERPOWER.COM	PM: AS DRAFTER: KS REVIEW: